Pledco Broadcast Outdoor User's Manual

Version 1.1

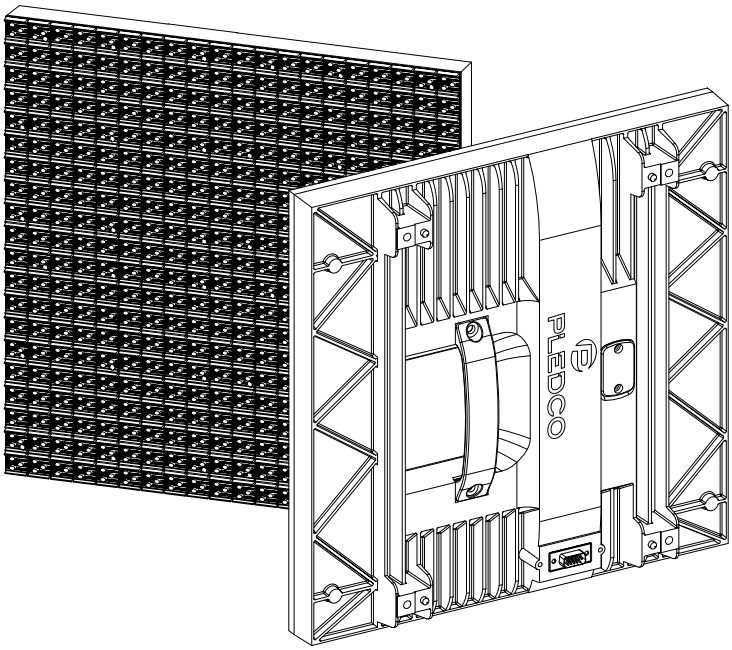

Table of Contents

1. Safety 3
   1.1 Guidelines 3
   1.2 Safety instructions 3
2. Pledco Broadcast Outdoor Tiles and Units 5
   2.1 Pledco Broadcast Outdoor Tile 5
   2.2 Pledco Broadcast Outdoor Unit 5
   2.3 Pledco Broadcast Outdoor Block 7
   2.4 Pledco Broadcast Outdoor display 10
3. Installation requirements 12
   3.1 Mechanical requirements 12
   3.2 Electrical requirements 13
   3.3 System requirements for the Control software 14
4. Components of an Pledco Broadcast Outdoor display 15
   4.1 Pledco Broadcast Outdoor Unit and Block 15
   4.2 Mechanical Components 17
   4.3 Power Supply Unit (PSU) 19
   4.4 Logic Distribution Unit (LDU) 19
   4.5 Video Processing Unit (VPU) 20
   4.6 Cables 20
   4.7 Control software 21
   4.8 Others 24
5. Installation 27
   5.1 Preparing the supporting structure 27
   5.2 Mounting a typical Pledco Broadcast Outdoor display 30
      5.2.1 Preparing the Block 30
      5.2.2 Mounting the Blocks 32
      5.2.3 Fixing other structural components 33
   5.3 Mounting a large Pledco Broadcast Outdoor display 37
      5.3.1 Mounting empty Blocks 37
      5.3.2 Mounting the Units 39
   5.4 Mounting a small Pledco Broadcast Outdoor display 40
      5.4.1 Assembling the Pledco Broadcast Outdoor display 40
      5.4.2 Mounting the small Pledco Broadcast Outdoor display 41
   5.5 Mounting a front serviced Pledco Broadcast Outdoor display 42
      5.5.1 Preparing the supporting structure 43
      5.5.2 Preparing the Block 43
      5.5.3 Mounting the Blocks 44
   5.6 Typical mounting of a block structure 45
6. Cabling an Pledco Broadcast Outdoor display 48
   6.1 Cabling between Units 48
   6.2 System cabling 49
      6.2.1 Cabling an on-line Pledco Broadcast Outdoor display 49
      6.2.2 Cabling an off-line Pledco Broadcast Outdoor display 50
   6.3 Grounding 51
   6.4 Pixel limitations 52

6.4.1 Limitation of signal connection 52
6.4.2 Limitation of power connection 52
7.1 Firmware update 54
7.1.1 LDU firmware update 54
7.1.2 Updating the display unit controller firmware 54
7.2 Replacing a tile of an Pledco Broadcast Outdoor display 55
7.3 Replacing a tile of a front serviced Pledco Broadcast Outdoor display 55
7.4 Replacing a power supply of the display unit 56
7.5 Replacing a display unit control board 57
7.6 Replacing an LDU control board 57
7.7 Cleaning tile masks 58
8. Trouble shooting 59
9. Specifications 61
9.1 Pledco Broadcast Outdoor VFO series display specifications 61
9.2 Dimensions of a Pledco Broadcast Outdoor display 62
9.3 Weights of Pledco Broadcast Outdoor display parts 64
10. Part Numbers of Pledco Broadcast Outdoor display parts 65

1. Safety

Before installing an Broadcast display, one is required to read this chapter carefully to obtain important information as to how to prevent personal injury and to protect the display from damage during installation.

Overview

- Guidelines
- Safety instructions

1.1 Guidelines

- Before installing the display, make sure you have read the User's Manual with full understanding.
- Installation must be performed by authorized and qualified technical personnel only.
- The installation site must be solid and without any chance of sinking, tumbling or falling. It must be at the same time free of over-heat, radiation, pollution, corrosion or gas release.
- Only use components provided by the Manufacturer or those approved or specified by the Manufacturer during installation of Broadcast series displays.
- Do not modify and/or replicate any component or accessory without permit from the Manufacturer.
- Always follow all installation instructions. Please contact the Manufacture if any problem arises.

Special attention should be paid to all **CAUTION**?and **TIPS**?mentioned in this User's Manual which respectively intends:

CAUTION: to draw operators attention to an important instruction or to remind them of what might happen.

TIPS: to give advice on how to perform an operation better.

1.2 Safety instructions

Product care

- All parts must be fully protected and packed in good order during transportation, storage, etc. No external pressure shall be applied on them.
- No part of the product can come into contact with rain before or during installation. Keep them in dry and clean places.
- All parts must be prevented from being trampled, stroke or dropped. Follow all instructions while carrying or moving the parts. Otherwise the product can be subject to terminal damage.

Installation

- Before installation, ensure that the supporting structure or frame has sufficient strength to hold the display firm and safe.

- For hoist installation, the operator must follow all instructions given in this User's Manual, including where the hoist brackets should be located, that the crane used must come with sufficient capability to hoist the product, and that the operating ground must have the strength to sustain the crane, etc.

- Most components of the product are heavy. Therefore high attention should be paid to personel safety during installation.

- All connection bolts must be fastened firmly and securely.

Power

- An Broadcast display is to be powered by a 3-phase power with 5 lines. That is, it must come with an independent neutral line and an independent ground line.

- Provide the power and power supply circuits in accordance with the power consumption of the display. All circuits must come with protection tubes and confirm with the local electrical safety standards.

- The LDU and PSU must be installed near the display. Cables from the LDU and PSU to the display cannot be stretched or impaired. Power distribution from the PSU to the display cannot exceed what is required by this User's Manual.

- The input voltage of a Broadcast display can be set at 120VAC or 220VAC. But ensure to set it right before power connection.

- Do not attempt to fix an impaired cable. Replace it with a new one.

- A big current is produced the moment a display is powered on. Therefore an air breaker that can sustain big currents should be used as the master power switch.

Grounding

- Broadcast displays must be grounded with an INDEPENDENT ground wire.

- Displays to be installed independently from any architectural structure must be equipped with an independent ground wire and, if necessary, a lightning rod. The down lead of the lightning rod should be insulated with the frame of the display. Set the earth electrode of the lightning rod and that of the ground wire away from each other.

Usage

- LEDs on the display cannot be pressured at any time. Otherwise they can be damaged for good.

- Follow the steps mentioned in this User's Manual while cleaning the front side of the display. Only soft clothing or brush, neutral detergent and water are to be applied to the display.

- Power must be cut off before dismantling any part for maintenance.

2. Pledco Broadcast Outdoor Series Tiles and Units

This chapter introduces the major components of a Broadcast display.

Overview

- Pledco Broadcast Outdoor Tile
- Pledco Broadcast Outdoor Unit
- Pledco Broadcast Outdoor Block
- Package

2.1 Pledco Broadcast Outdoor Tile

Tile overview

The front and back view of an Pledco Broadcast Outdoor tile

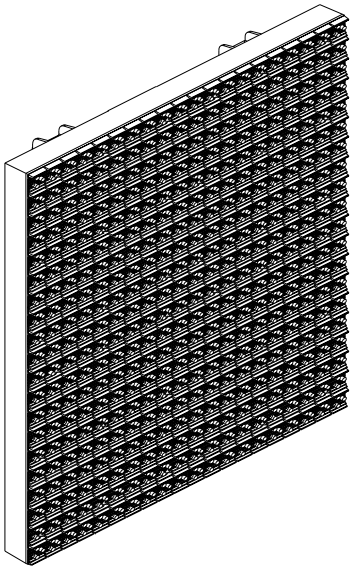

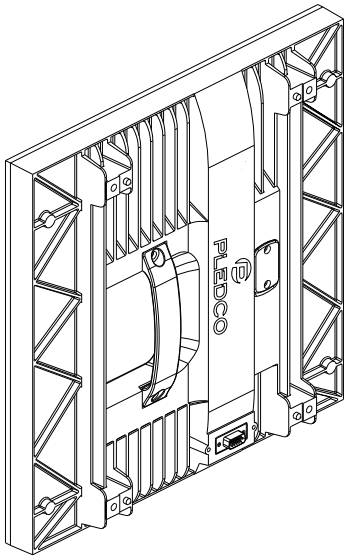

The models VFO13.3, VFO16, VFO 20 and VFO 26.7 included in the Broadcast series use the same tile but with different resolutions. Please see below:

Tile	VFO13.3	VFO16	VFO 20	VFO 26.7
Pixel pitch	13.3mm	16mm	20mm	26.7mm
Resolution	24X24	20X20	16X16	12X12
Weight	2.7kg			

Part Numbers

Tile	VFO13.3 Tile	VFO16 Tile	VFO 20 Tile	VFO 26.7 Tile
Part Number	380-013001	380-016001	380-020001	380-026001

2.2 Pledco Broadcast Outdoor Unit

Unit overview

A typical Broadcast Unit is made up of 4 tiles, 1 power box，2 structure bars and several cables.

This unit is the smallest function control unit of the Broadcast series.

The front and back view of the Broadcast tile:

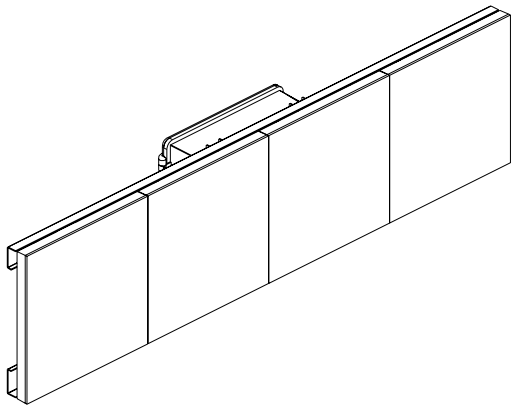

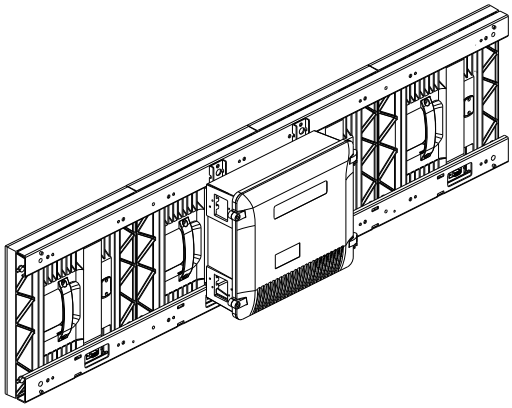

Parameters

Unit	VFO13.3	VFO16	VFO 20	VFO 26.7
Pixel pitch	13.3mm	16mm	20mm	26.7mm
Resolution	96X24	80X20	64X16	48X12
Weight	18.5kg	18kg		

Part Numbers

Unit	VFO13.3 Unit	VFO16 Unit	VFO 20 Unit	VFO 26.7 Unit
Partnumber	381-013001	381-016001	381-020001	381-026001

To be more flexible in combining into various sizes of displays, the Broadcast unit can also come in different quantity of tiles. Please refer to the table below for details:

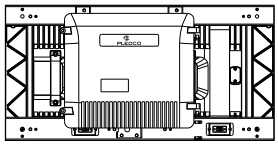

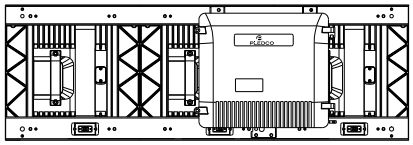

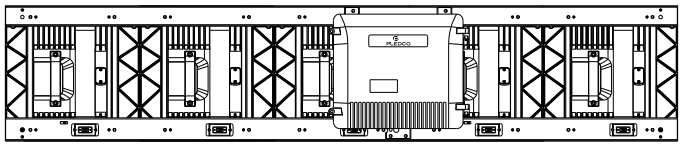

Pixel Reslution of special Units

	VFO13.3	VFO16	VFO 20	VFO 26.7
2 Tiles	48x24	40x20	32x16	24x12
3Tiles	72x24	60x20	48x16	36x12
5Tiles	120x24	100x20	80x16	60x12

Packages

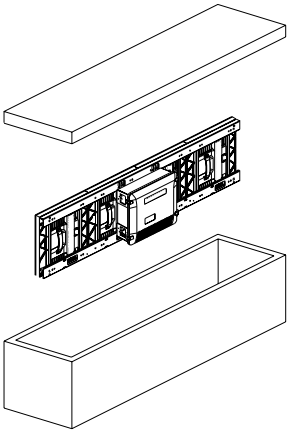

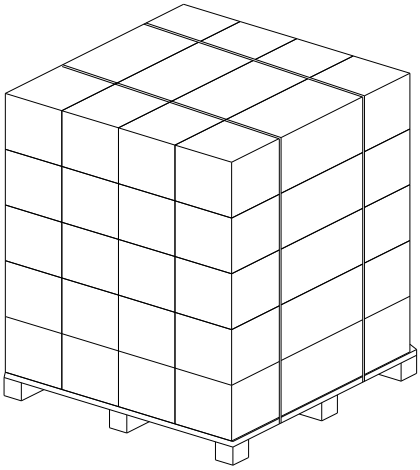

2.3 Pledco Broadcast Outdoor Block

Block overview

Composed of a certain number of Broadcast units and the structural frame, the Broadcast Block is the big installation unit for the Broadcast display. When the height of a display is no more than 5m, the height of the Block equals to that of the display itself.

The front and back view of a Broadcast block.

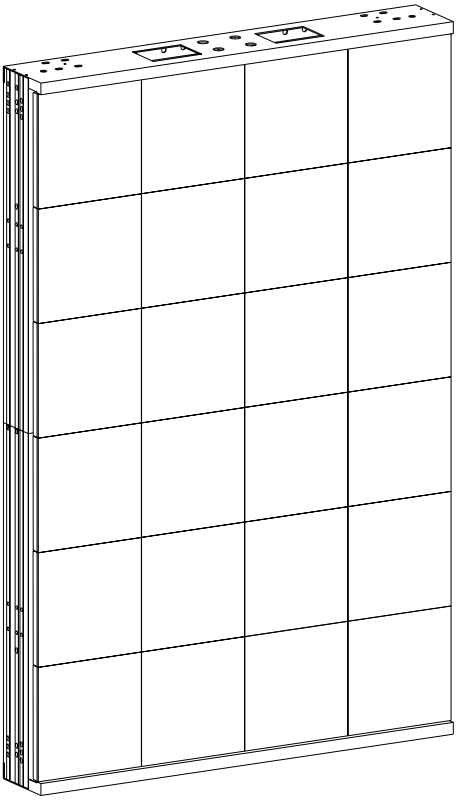

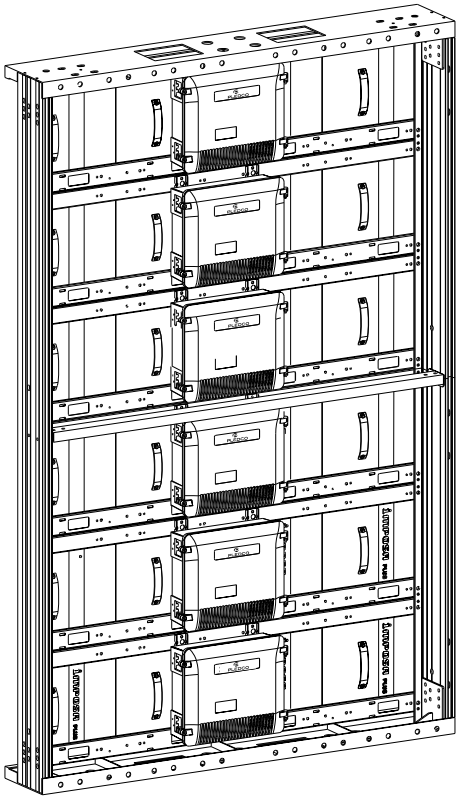

A Broadcast Block can be made with different specifications of units mentioned above, so that blocks with more flexible sizes are available.

Package

The Broadcast display is usually packed in blocks rather than in individual cabinets.

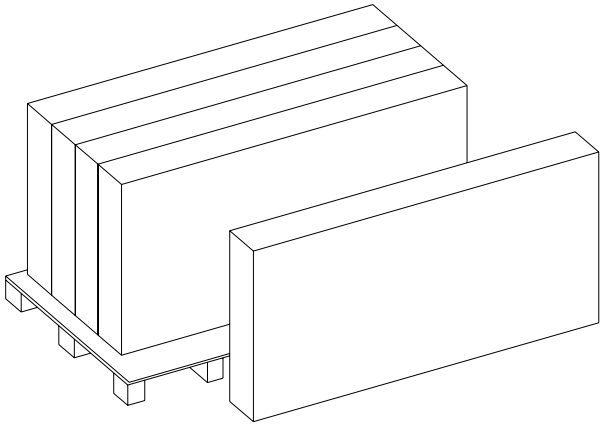

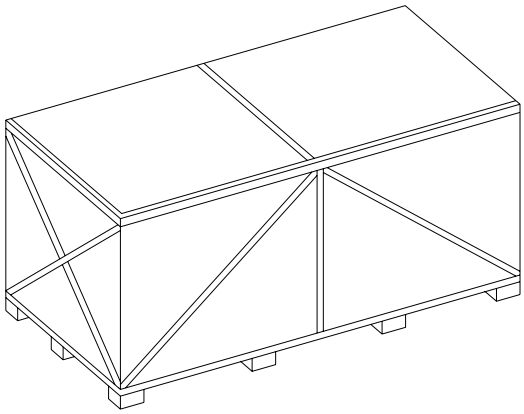

Move and Hang a block

Hanging brackets can be applied to the top of a Broadcast Block for ease of hoist and installation.

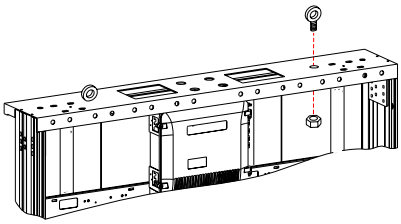

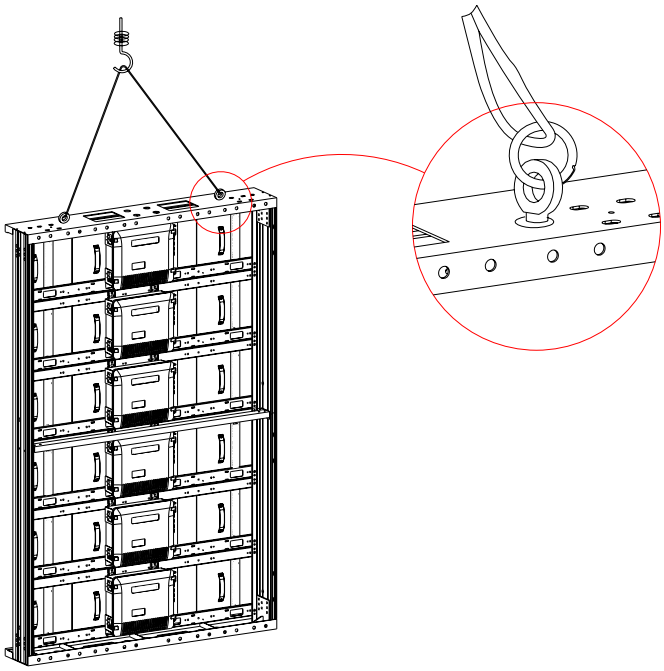

Hang the Block from aside

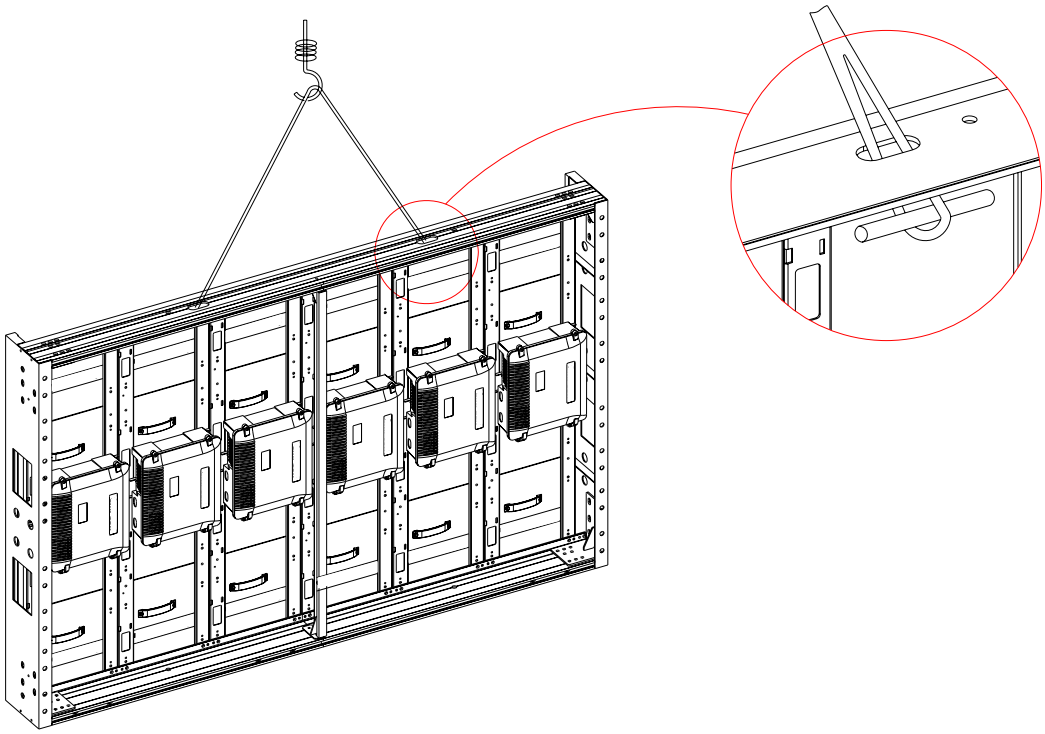

CAUTION: While hoisting a display, steps shall be strictly followed as below so as not to damage the LEDs.

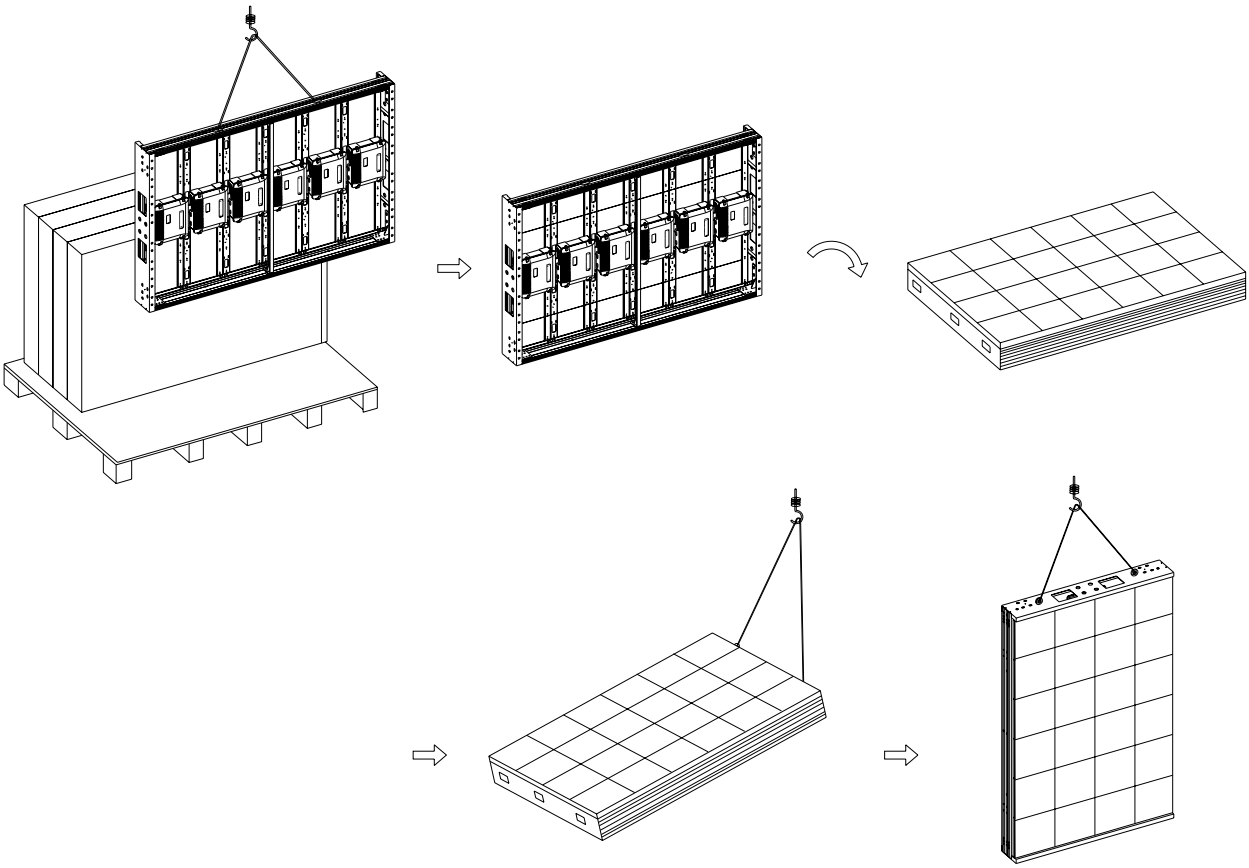

2.4 Pledco Broadcast Outdoor display

Pledco Broadcast Outdoor display overview

Featuring simple structure and quick, easy installation, the Broadcast display usually consists of a certain number of Broadcast blocks in structural frames.

View of a Broadcast display

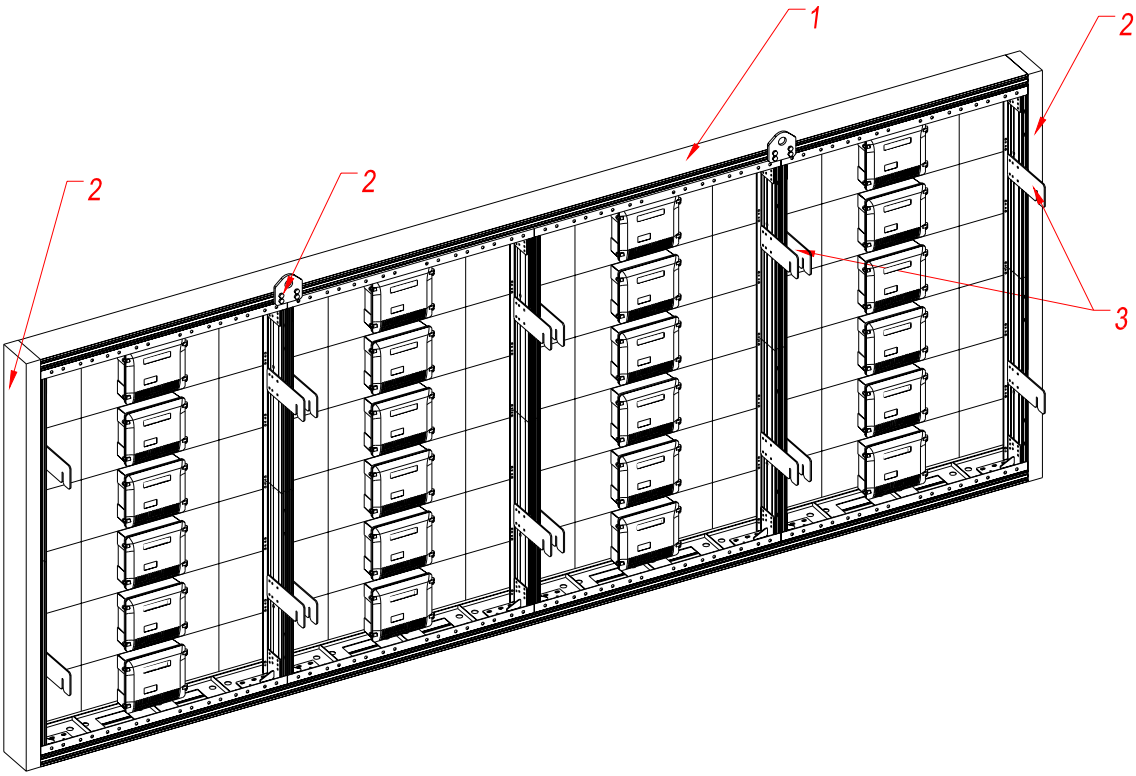

Part Numbers

	Parts	Part Numbers
1	Beam	380-1001XX
2	Side cover	380-1002XX
3	Hook	380-100401
4	Eyebolt	380-100402

The size of a Broadcast display depends on its length and height, both of which are an integral multiple of 320mm in the Broadcast design. Therefore various sizes are available for clients option.

A Broadcast display is composed of a certain number of standard blocks and one extra block with a special length. This specia l block is usually placed at the right side of the screen looked from the back.

View of a P20mm Broadcast display with the resolution of 240X96, sized 4800mmX1920mm:

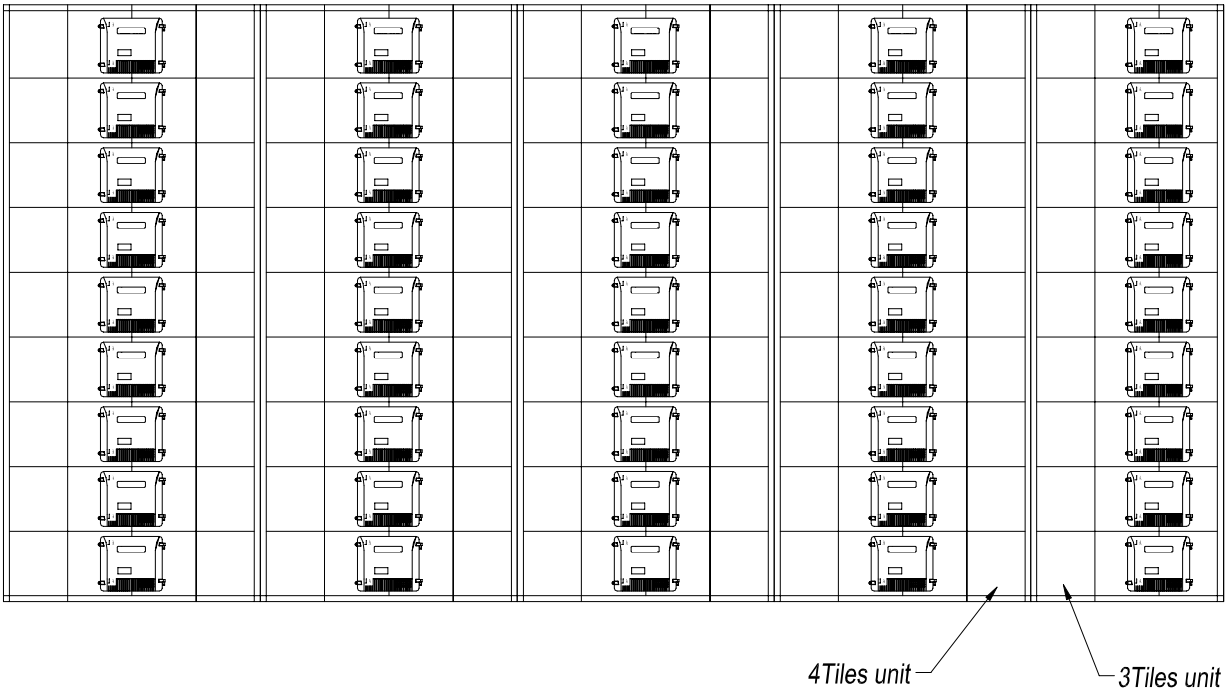
4Tiles unit
3Tiles unit

3. Installation requirements

This chapter covers requirements for installation, power supply and the control system of an Broadcast display.

Overview

- Mechanical requirements
- Electrical requirements
- System requirements

3.1 Mechanical requirements

A Broadcast display comes with its own structural frames. Besides, it requires a strong and reliable supporting frame at the back to hold the display firm. Wherever this supporting frame is to be installed, on the ground, onto the pole, in front of an object or on the top of a building, attention should be paid to the following few points:

1. The display should be installed in a place that allows a clear and complete view of the display.
2. The supporting frame has to be strong enough to prevent the display from tumbling.
3. Make sure the mounting surface of the supporting frame is at the same plane.
4. The installation site must have the strength to withstand the total weight of the display plus its structural frames.
5. Do not use the display in extreme environments. Take the ambient temperature, dust and ventilation, esp. that at the back of the display, into consideration while choosing an installation site.

The erection plane of a typical Broadcast display

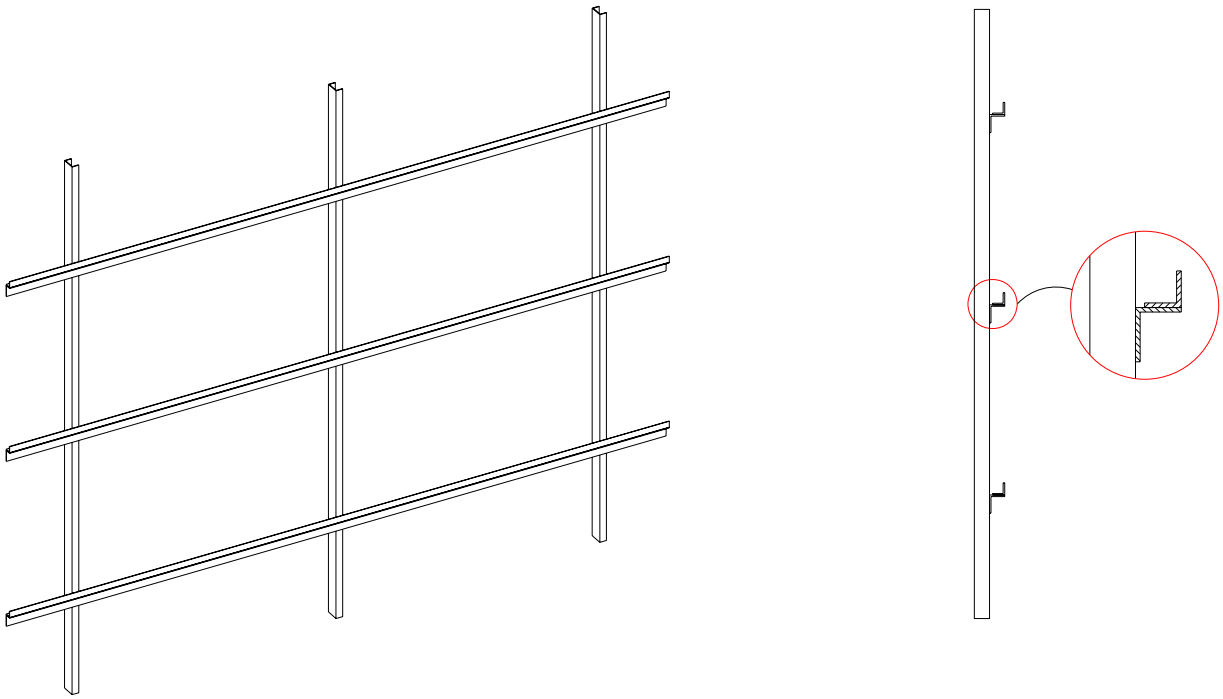

A typical supporting frame for the Broadcast display

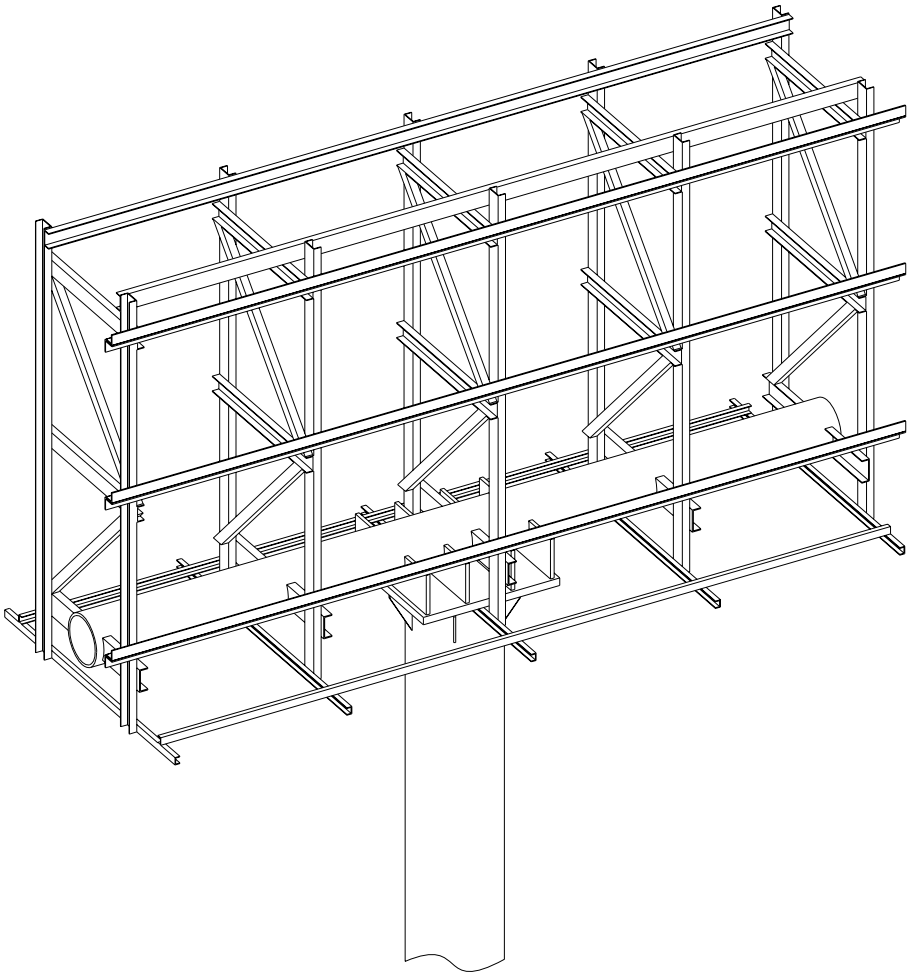

3.2 Electrical requirements

Power requirements

A Broadcast Block works on AC 200-240V, 50~60Hz. Each block has an independent power supply circuit and can thus be powered by electricity from different phases.
Broadcast displays are to be powered by 3-phase power supply circuits which include a hot, neutral and ground wire. The 3-phase power distributes power to each block on an average level.
The Broadcast block can also be powered by AC100-125V, 50~60Hz power supplies. But its alike recommended to power the whole display with a 3- phase power c/w 5 lines. In some circumstances a single-phase power can be used as well.
A PSU (power supply unit) is used to control power supplied to the Broadcast display.

Grounding

Whether there is a ground wire in its power supply circuit or not, a Broadcast display must be grounded at the installation site. Good grounding will enable the display to work properly and can prevent it from being disturbed by surge.

3.3 System requirements for the Control software

When the Windows System is in question:
PC System requirements：

- CPU Pentium IV or equivalent, 2.4GHz
- 1 GB DDR RAM
- Free hard disk space 300MB
- Resolution 1280x1024 with 32M video memory
- DVI port
- Ethernet connection
- Windows XP Professional or Windows Vista

4. Components of a Broadcast display

This chapter continues to introduce components that complete a Broadcast display.
Overview

- Broadcast Unit and Block
- Mechanical Components
- Power Supply Unit (PSU)
- Logic Distribution Unit (LDU)
- Video Processor Unit (VPU)
- Cables
- Control software
- Others

4.1 Broadcast Unit and Block

Introduction to the Broadcast Unit

The Broadcast Unit is the basic display unit of a Broadcast display. The unit is usually composed of 4 tiles, 1 power box, some structural bars and 4 cables. Inside the power box are a switch power supply for the 4 tiles, the control board QS5246 and in and out power and data connectors.

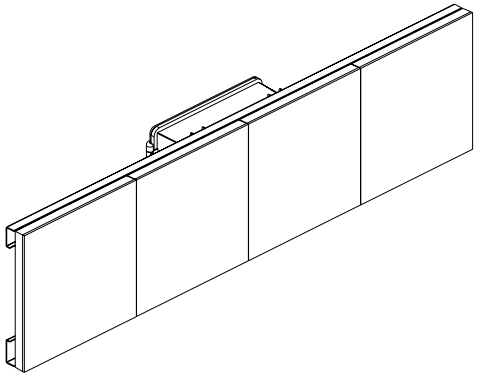

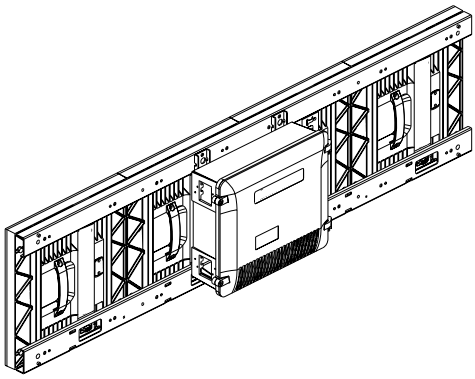

Parts of the Broadcast Unit

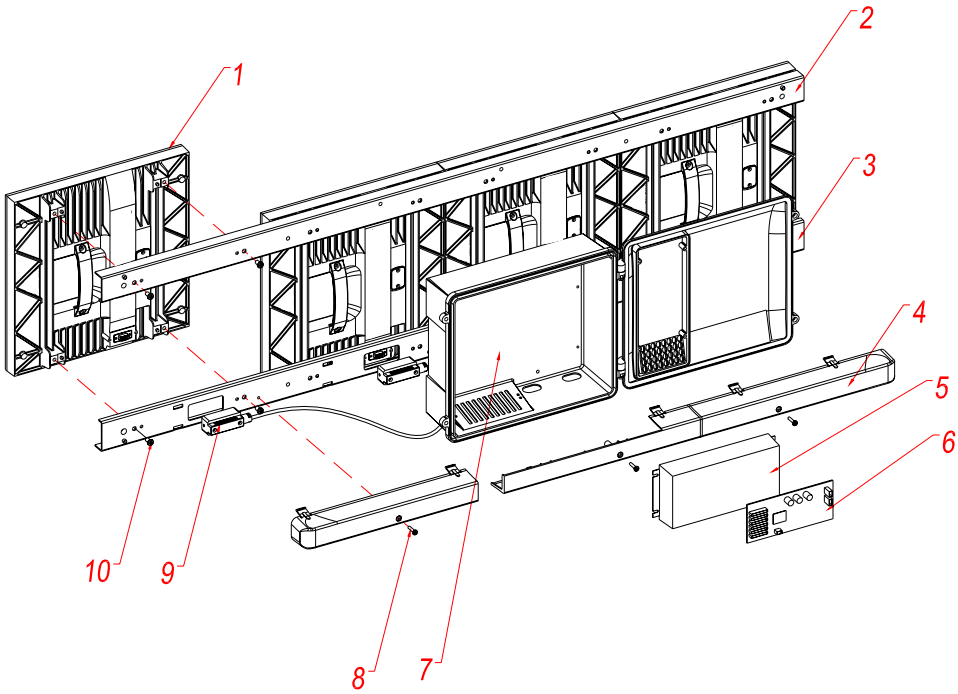

Parts and Part Numbers

	Parts	Part Numbers	Remark
1	Tile	380-016001	16mm
2	Top beam	380-100403	
3	Bottom beam	380-100404	
4	Cable left cover	380-100501	
	Cable center cover	380-100502	
	Cable right cover	380-100503	
5	Power supply	380-200101	S-320-5
6	Control board	380-200201	5242
7	Power box	380-100501	
8	Screw(M4X50)		M4X50
9	Signal connector left	380-300001	
	Signal connector right	380-300002	
10	Screw(M6X12)	M6X12	
	Fan	380-200301	5V 60X60X20

Introduction to the Broadcast Block

As the core component that makes up of a Broadcast display, the Broadcast Block helps make the assembling and installation of the display very simple and easy.

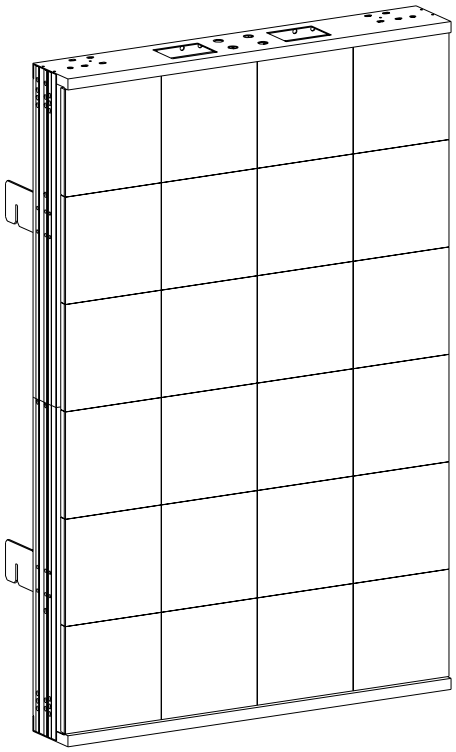

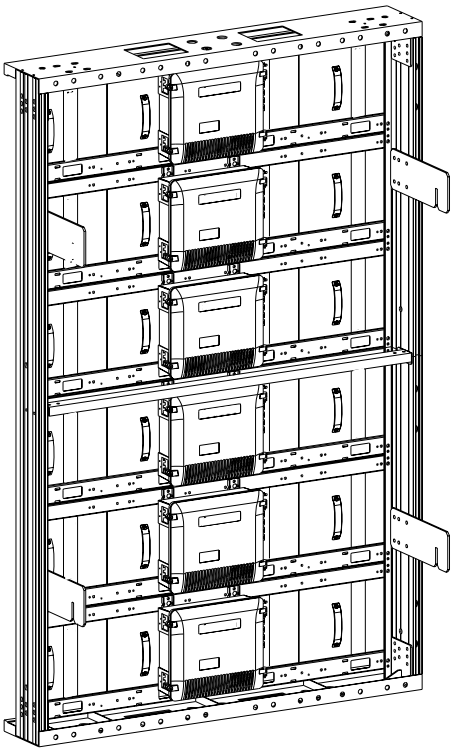

Parts of a Broadcast Block

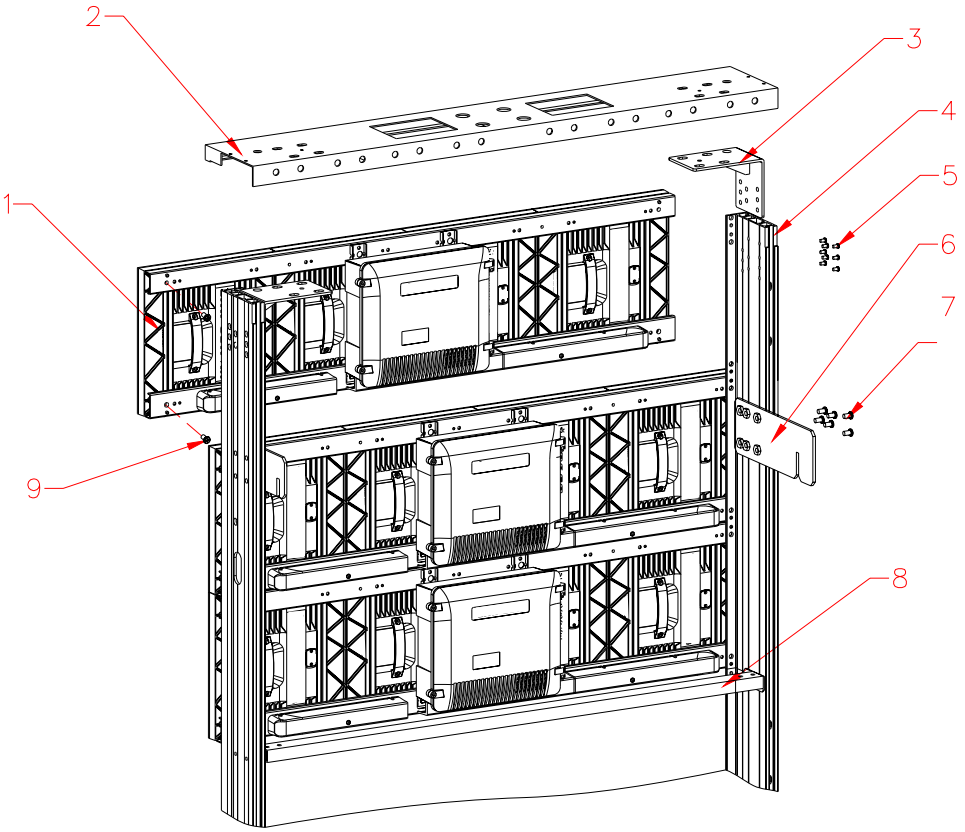

Parts and Part Numbers

	Parts	Part Numbers	Remark
1	Unit(1280mmx320mm)	381-016001	16mm
2	Block plate	380-100405	
3	Connection bracket	380-100406	
4	Aluminum frame	380-1003XX	
5	Countersunk head screws（M6X40）		M6X40
6	Hook	380-100401	
7	Countersunk head screws（M6X40）		M6X40
8	Supporting beam	380-100407	
9	Screw(M6X12)		M6X12

4.2 Mechanical Components

Besides the Broadcast Block, a Broadcast display also comes with structural components including a top beam, a bottom beam, side covers and eyebolts, etc.

A top beam together with a bottom beam forms the main structural component that integrates all the Blocks into a complete display.

The side covers are more of a decorative purpose. They are used to make the display look complete as a quadrangle.
Eyebolts are used to hoist a display. They can be removed after the display has been installed in place.

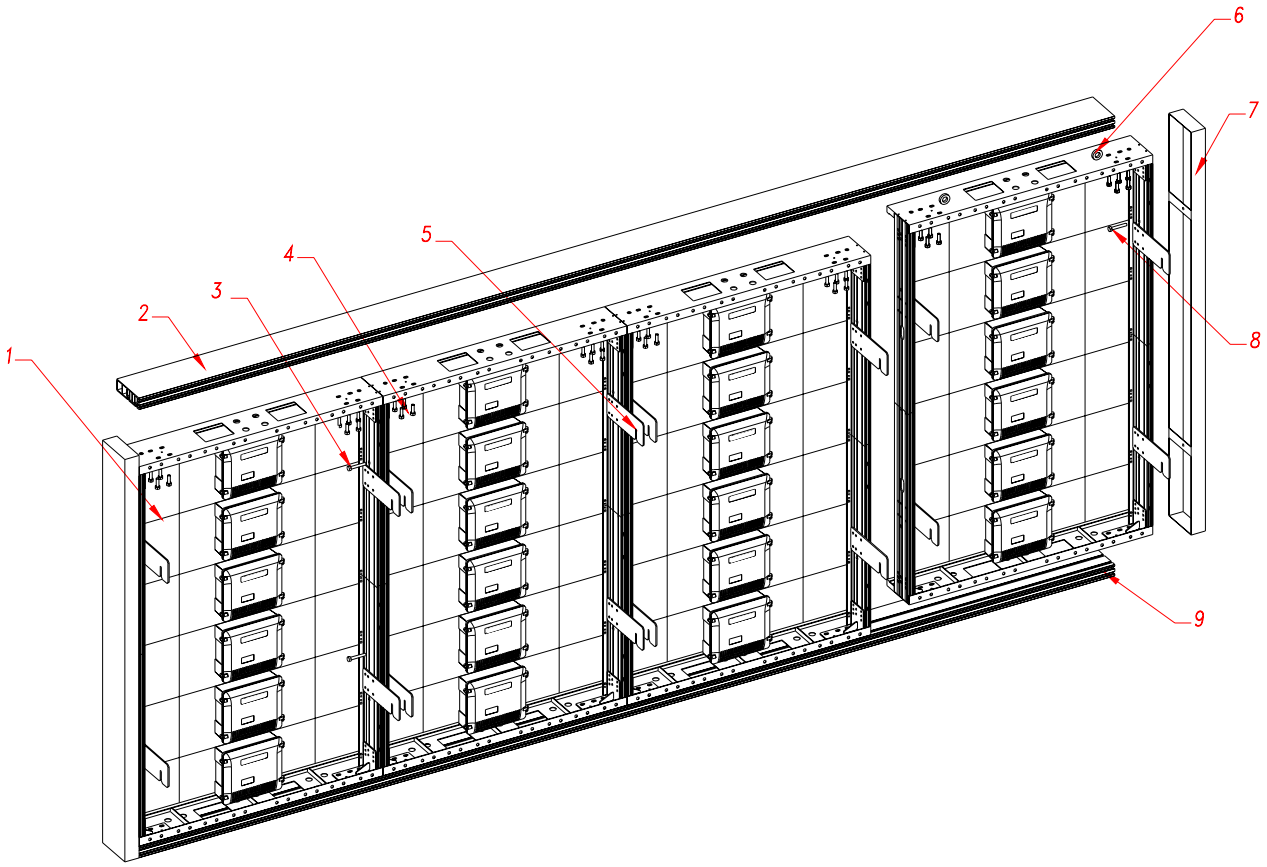

Parts and Part Numbers

	Parts	Part Numbers	Remark
1	Block		
2	Top Beam	380-1001XX	
3	Countersunk head screws（M6X40）		M6X40
4	Screw(M12X35)		M12X35
5	Hook	380-100401	
6	Eye rings	380-100408	Remove before fix top beam
7	Side cover	380-1002XX	
8	Screw(M12X45)		M12X45
9	Bottom beam	380-1001XX	
10	Hook lock		
11	Hang plate		

4.3 Power Supply Unit (PSU)

The PSU, short for Power Supply Unit, is the power control center for a Broadcast display. Power to each Block can be direct ly connected to the PSU in order. Each channel on the PSU connects one Block.
A PSU is inbuilt with a surge protector so as to prevent the display from being disturbed by lighting.
The PSU can also be connected with the LDU to realize remote display on/off control.

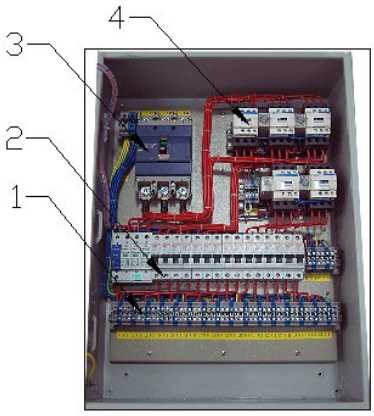

Parts and Part Numbers

	Parts	Part Numbers	Remark
	PSU-10KW	381-100110	120V
	PSU-25KW	381-100125	120V
	PSU-40KW	381-100140	120V

4.4 Logic Distribution Unit (LDU)

The LDU is the central controller for a Broadcast display. It mainly includes the control board QS5800 or QS5003.

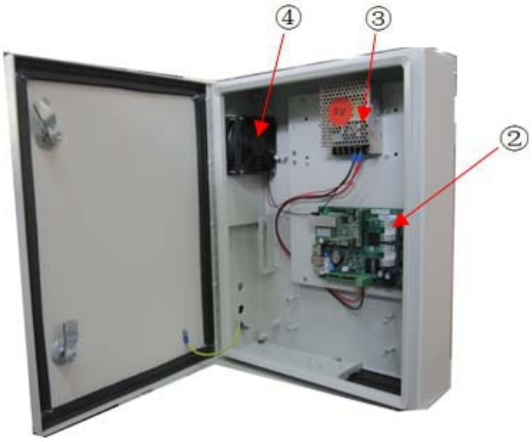

Parts and Part Numbers

	Parts	Part Numbers	Remark
1	LDU3000	381-100201	
2	Control board (QS5800)	380-200202	QS5800
3	Power supply (5V)	380-200102	5V
4	Fan	380-200302	

4.5 Video Processing Unit (VPU)

The VPU, short for Video Processing Unit, is the video and DVI sync processor in the Broadcast synchronous control system. It is compatible with various video signal inputs as well as the DVI signal input. These signals are then transmitted to the LDU via an optic fiber and shown on the display.

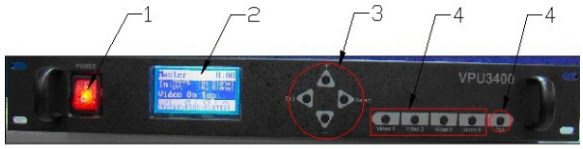

Instrutuion

	Parts
1	Power switch
2	LCD screen
3	Menu
4	Shortcut key to other Video Sources
5	Shortcut key to DVI Input

4.6 Cables

Signal cable between LDU and Blocks

Power cable between PSU and Blocks

DVI cable

Network cable

Fiber cable

USB cable

4.7 Control software

The series of control software developed by Chainz one itself are meant for system setting, test and display control of a Broadcast display.

TIPS: Please refer to the user's manual of each control software for more information about their functions and use guidance.

Broadcast Tool

Broadcast Tool is the tool software for the LDU to set up, configure, manage and test the display.

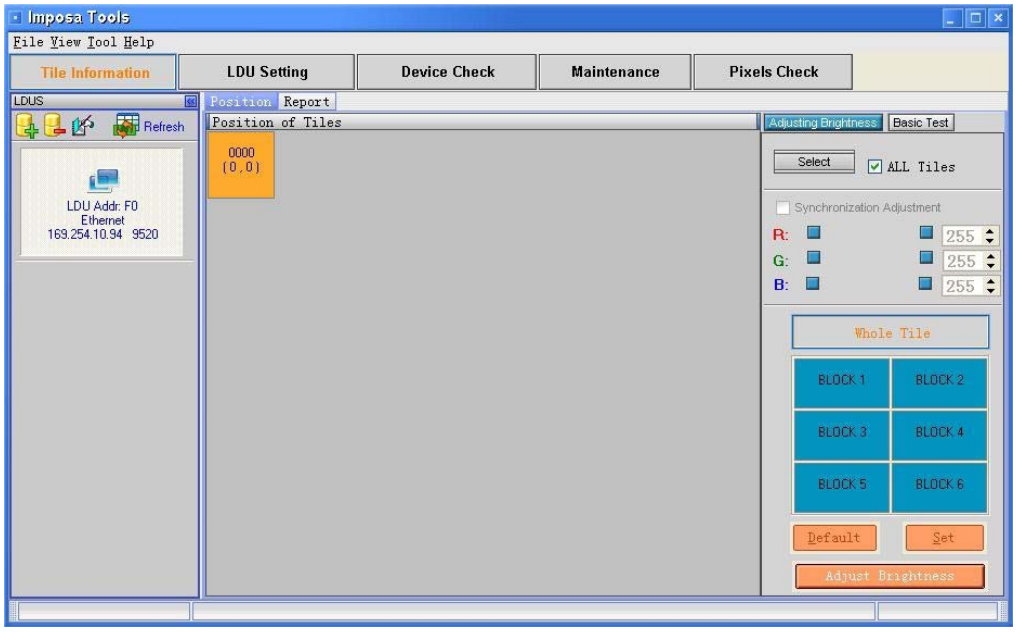

Sigma 3000

Sigma 3000 is a powerful control software for an offli ne system. It can be used to set up, configure the display as well as control, manage, test and record what is shown offline on the display.

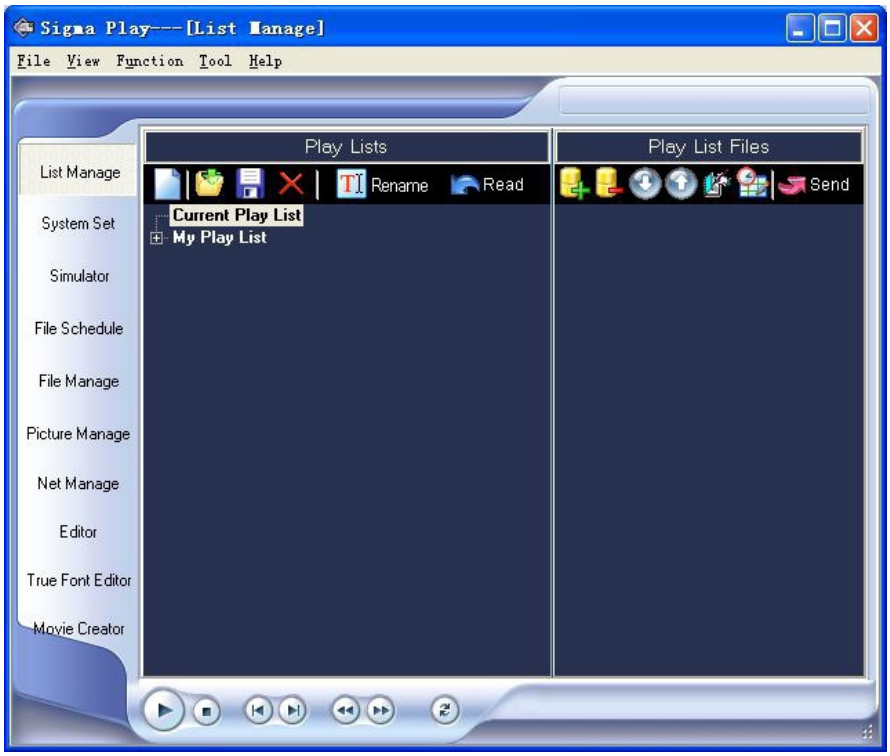

LED Net

LED Net is another functional offli ne control software that controls via the Web. Its embedded in the control board QS5800 and is meant for use on this board only.

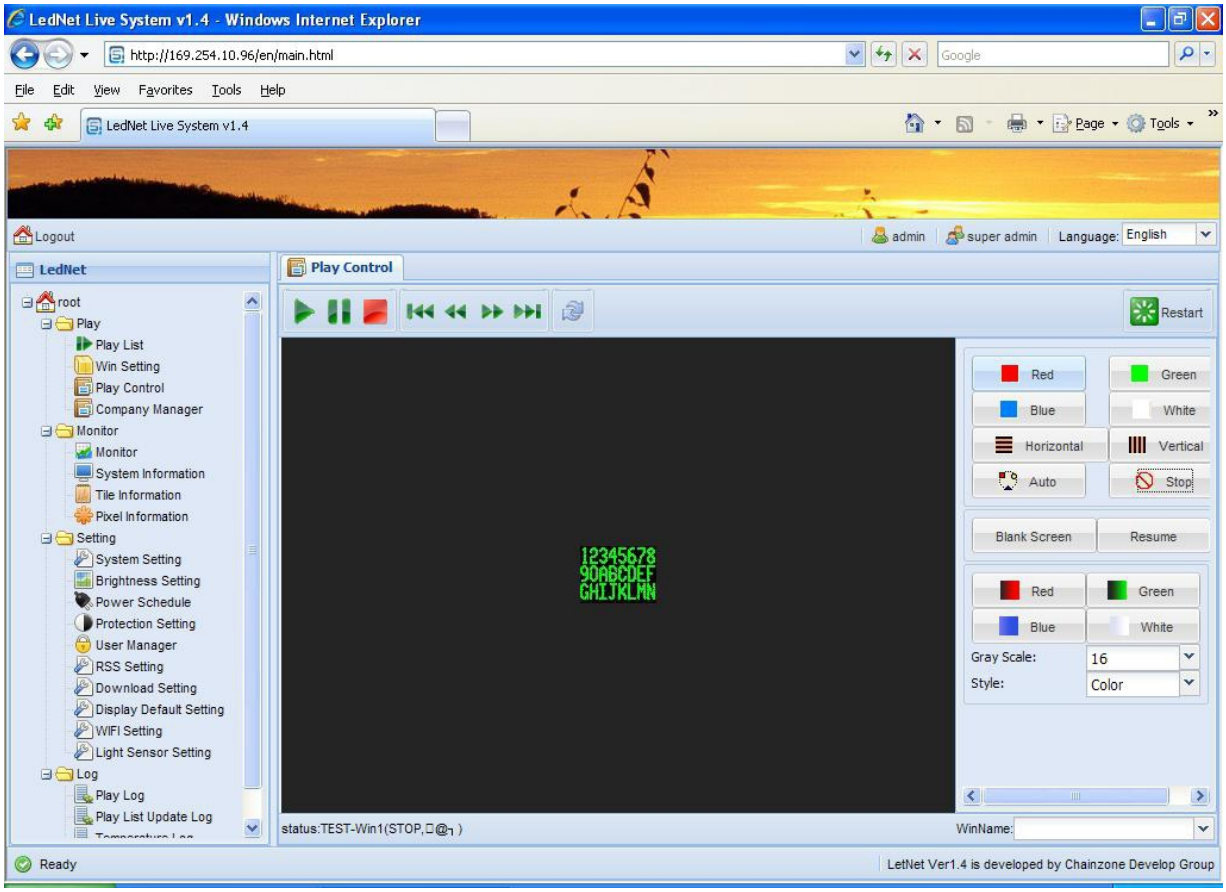

Broadcast play

Broadcast play is the sync control software for an Broadcast display. Its used to control synchronous display of video files on the display as well as for system setup.

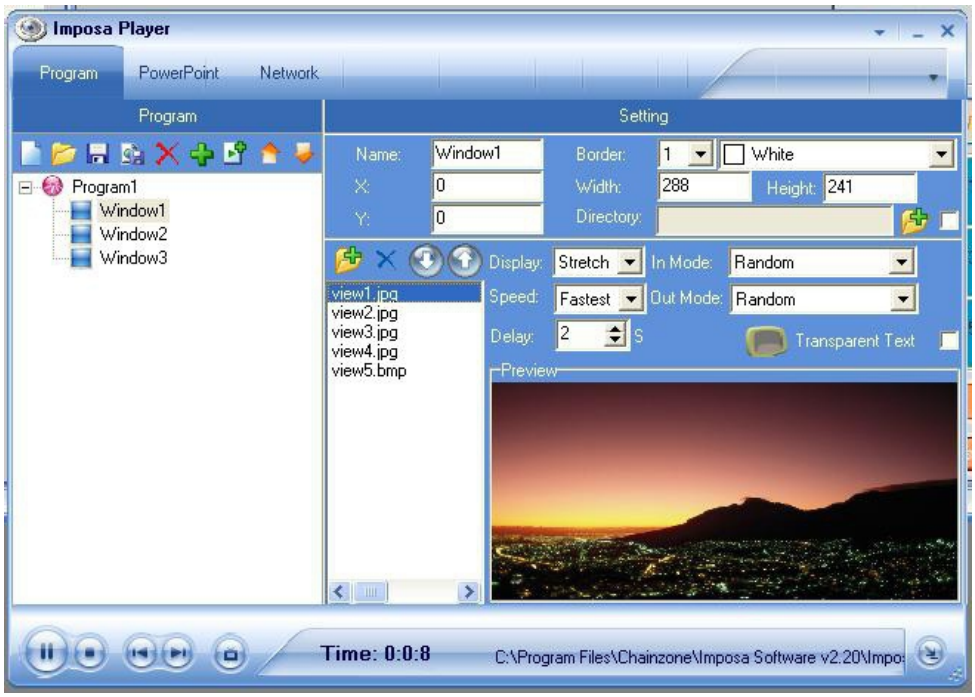

VPU 3400

VPU 3400 is the setup and control software for the VPU. Its used to manage and control the synchronous display of various videos inputs on the display and as always, system setup.

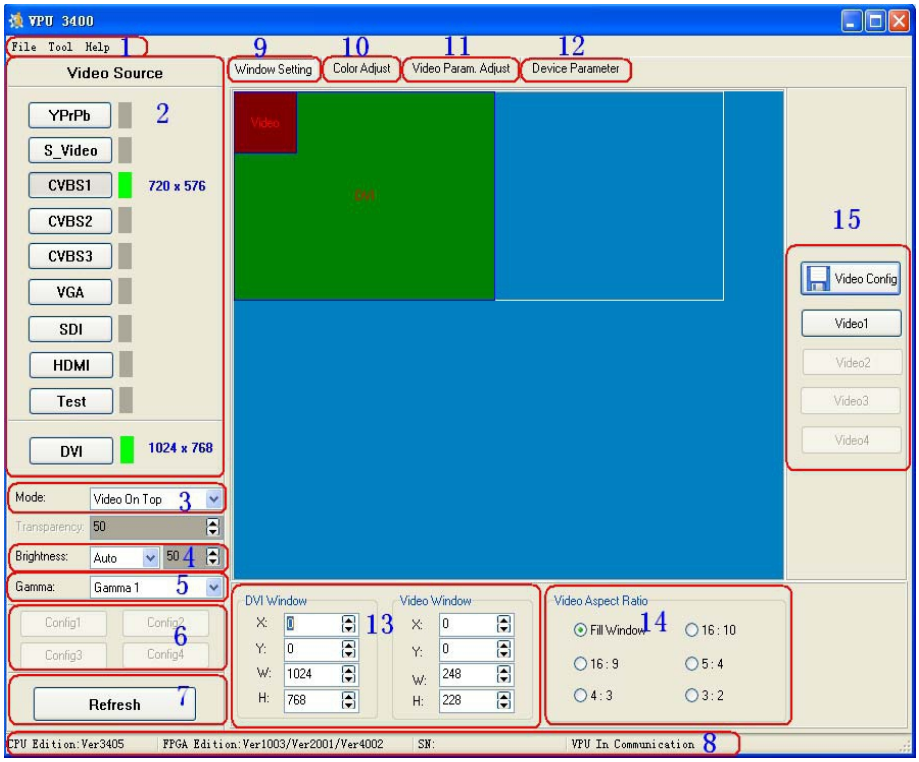

4.8 Others

There are some other accessories that may be required whether for the offline or synchronous system. Clients can provide such accessories on their own according to actual application or to their preferences.

DSL Modem

A DSL Modem is required for an offline Broadcast display that is to be controlled remotely or via the Internet. Users can easily get this item from the market by themselves. The user also needs to apply for the DSL route at the local telecom bureau.

Wireless Access Point

However, when the offline Broadcast display is not far away from the control center, the user can simply use a wireless AP or wireless Router to integrate the display into the Wi-Fi network. The display shall then be able to communication with the computer in the network. If the display can even be seen in the straight di rection, the use is advised to use a directed wireless AP instead whose com distance can go up to 1km.

Router

Besides the display itself, some other accessories c/w the display, say the Network Camera, also require access to network. Therefore a network port, usually a Router, should be built in the display.

If the display is a double-sided one embodied in 2 cabinets, the Router shall have to integrate both sides into the communication network.

Of course, the user can directly use a wireless AP that comes with the Router function as well.

Network Camera

Most displays that are controlled remotely are equipped with a Network Camera in front of the top of the display. By doing so, the user can watch over the running condition as well as whats being shown on the display in real time. A camera that can live up to such an application must be waterproof and come with wide-angle lens. As far as we know, the MOBOTIX M22M can be a good choice.

Others

To complete the control system, a computer instal led with various video or picture tailoring or editing software is also required.
If the synchronous system is in ques tion, extra video devices say a Camera, a Record disc, etc. are requires as well.
All the accessories mentioned above are to be provided by the user on t heir own based on actual applications.

An Broadcast display with offline system

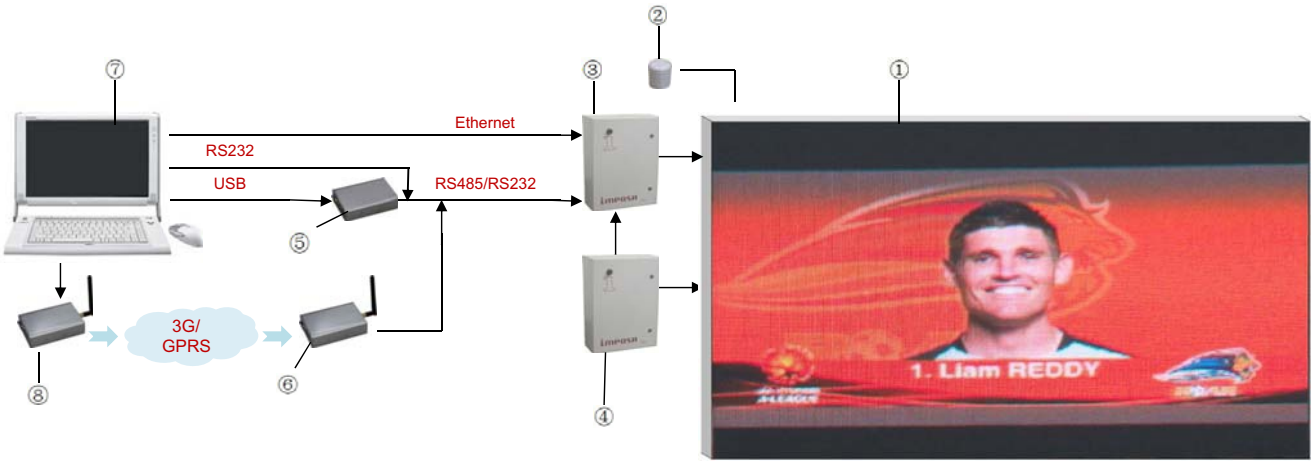

	Note
1	Display
2	Brightness/temperature/humidity sensor
3	LDU
4	PSU
5	USB⇨RS485/RS232 Convertor
6	3G Modem/GPRS Modem
7	PC
8	3GModem/GPRS Modem

A Broadcast display with synchronous system

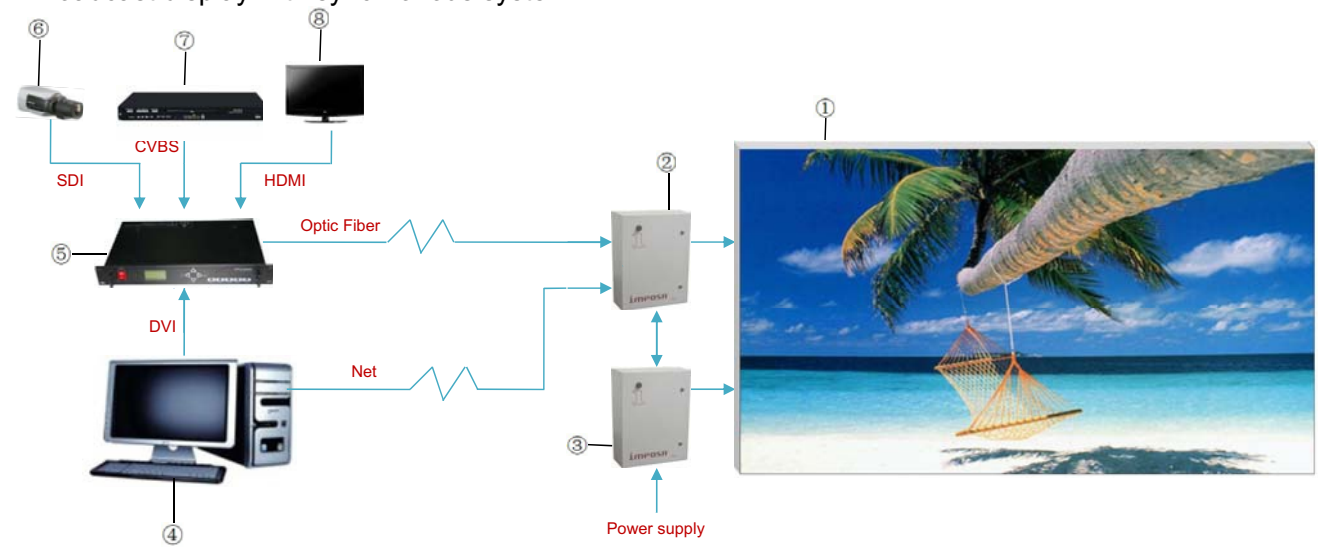

	Note
1	Display
2	LDU
3	PSU
4	PC
5	VPU
6	Camera
7	Player
8	Cable TV

5. Installation

This chapter describes the various installation methods of a Broadcast display.
Overview

- Preparing the supporting structure
- Mounting a Broadcast display
- Mounting a front serviced Broadcast display
- typical mounting of a Block

5.1 Preparing the supporting structure

There are hooks on each Block of a Broadcast display. These hooks are to be connected with the supporting structure.

Typical installation of a Broadcast display

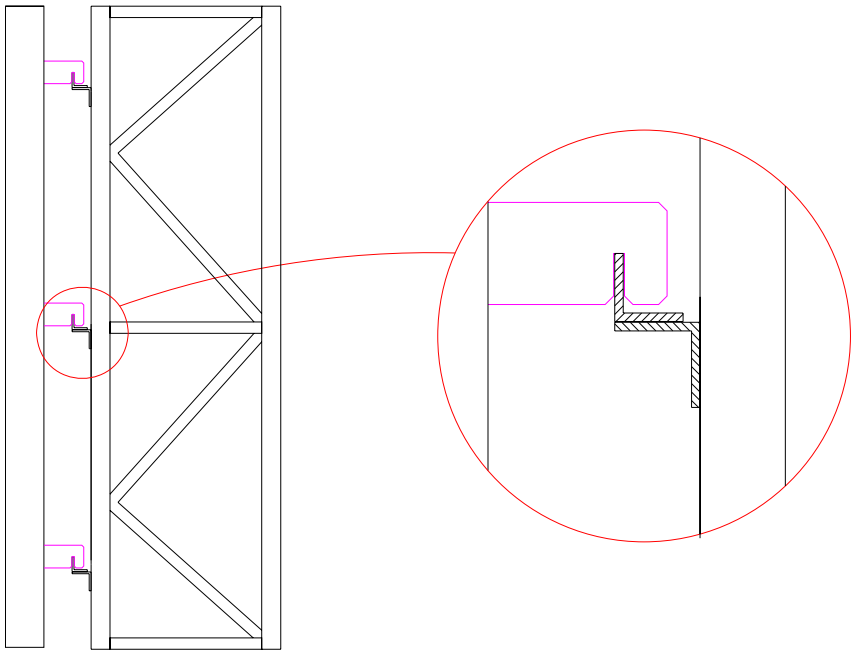

The connection positions on the supporting structure must correspond to the hooks on the Broadcast display. In a standard Broadcast display, the distance between 2 neighboring hooks in the vertical direction is 320mm, equaling to the height of a Broadcast Unit. The quantity of hooks in the vertical direction is thus correlated to the height of a display, or, in other words, to the quantity of units in the height of a display.

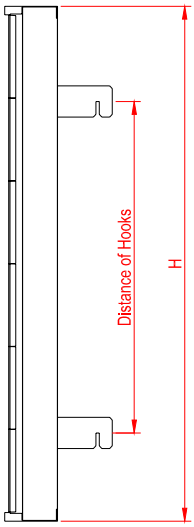

Display Height (H)	Unit Qty. in Vertical	Hook Qty.	Distance of Hooks
2110	6	2	1280
3390	10	3	
46704	14	4	
58505	18	5	

Pledco provides a special moudel tool for clients to easily locate the mounting position where hooks connect with the beams.
When building or rebuilding the supporting structure, its of great importance to ensure a leveled surface between the beams.

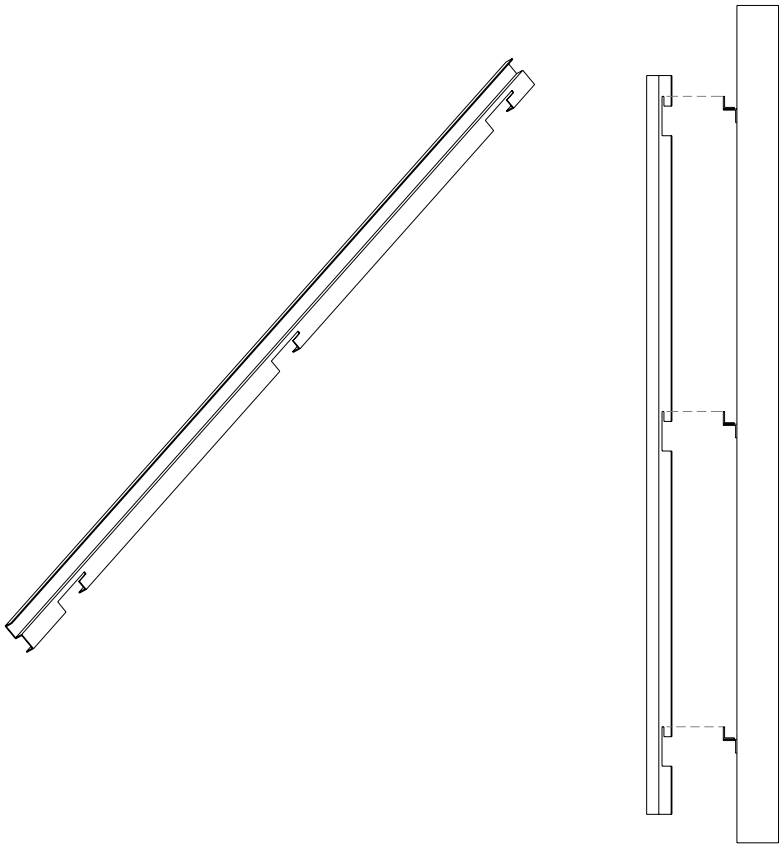

CAUTION: Before installing a display onto an existent supporting structure (for instance, to replace the original billboard with a Broadcast display), the client is advised to discuss with Pledco or its agent before production to make sure hooks on the Blocks would match connection positions on the existent supporting structure.

The client needs to make sure the existent supporting structure has the strength to sustain the weight of the display before he sets to replace the original billboard with a display. If not, the client may need to enhance the structural strength of the supporting structure. Positions that connect with the hooks of the display need to be strengthened as well.

The following example shows how to reconstruct an existing billboard supporting structure for a Broadcast display:

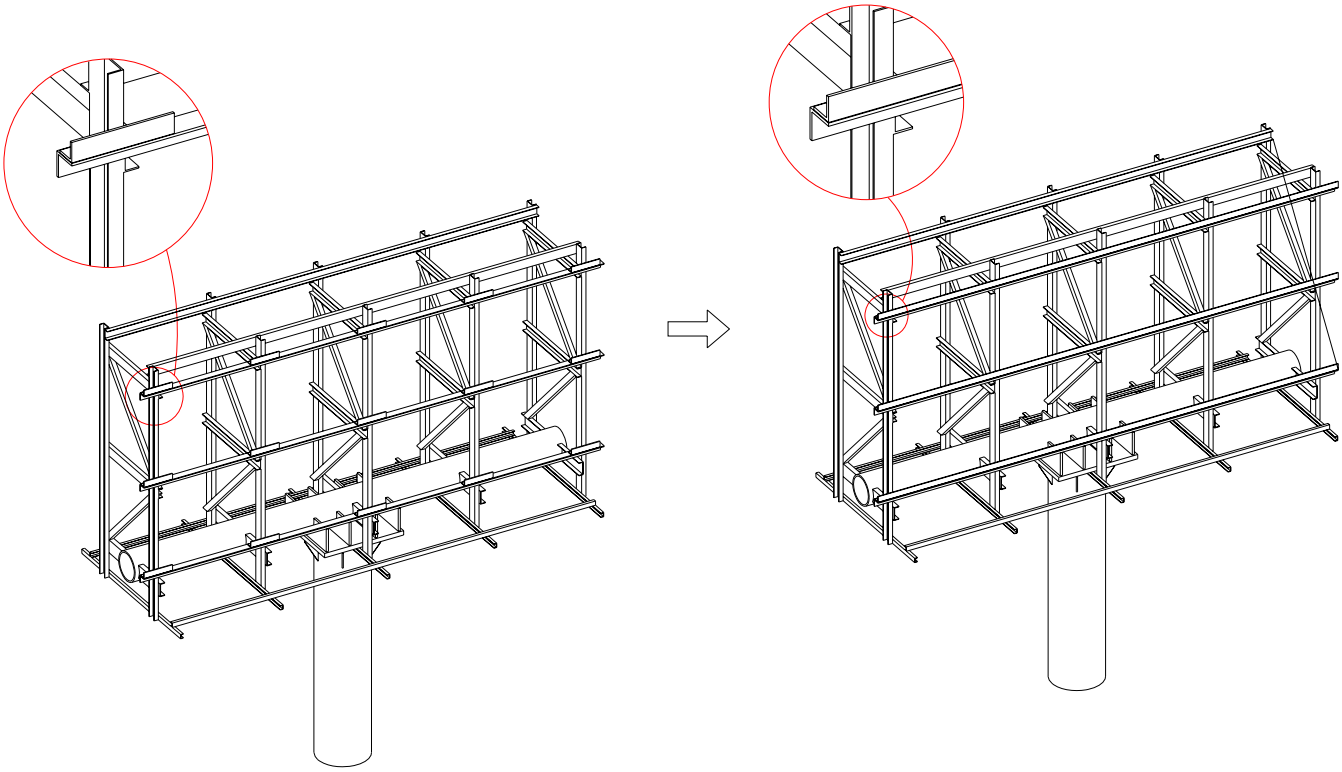

5.2 Mounting a typical Broadcast display

The typical Broadcast display refers to a display that can be packed and shipped in blocks with the height of the block betw een 8 and 16. Such a display can be installed in a simplest way as shown below:

Necessary Conditions

- The display can be packed and shipped in Blocks.
- A crane can be applied in the installation site.

Necessary tools

- A crane
- 19mm open-end wrench
- 19mm box-end wrench
- A Drill and 13mm drill bits

5.2.1 Preparing the Block

Remove the blocks from their package.

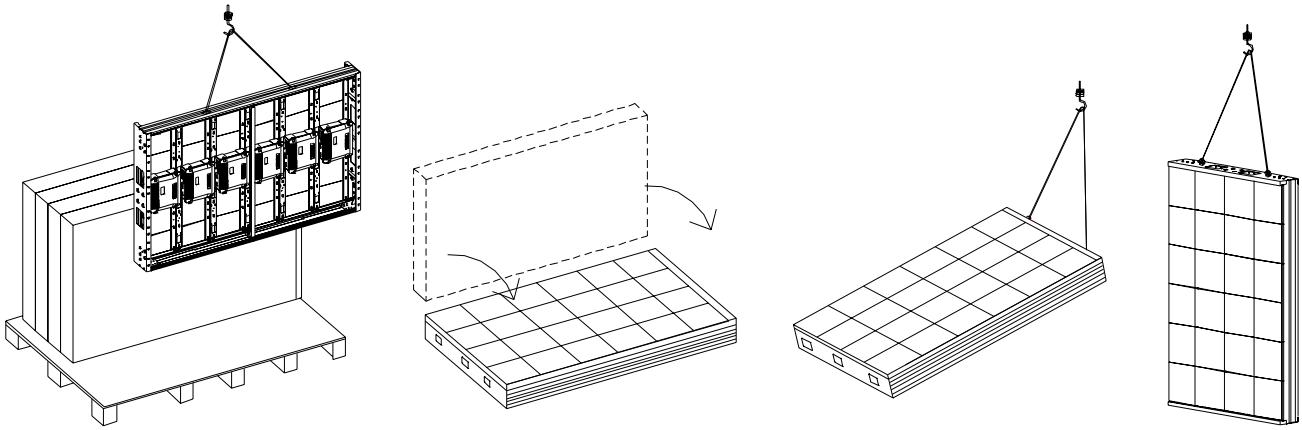

CAUTION: A block can be very heavy. Therefore one needs to be extremely careful while removing the block. Unpacking has to be done in st rict order as shown above. The LEDs cannot touch the ground directly or be pressured. Otherwise the LEDs can be terminally damaged.

Operations shown below are strictly forbidden:

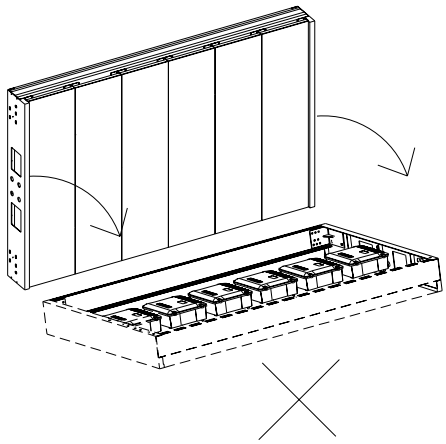

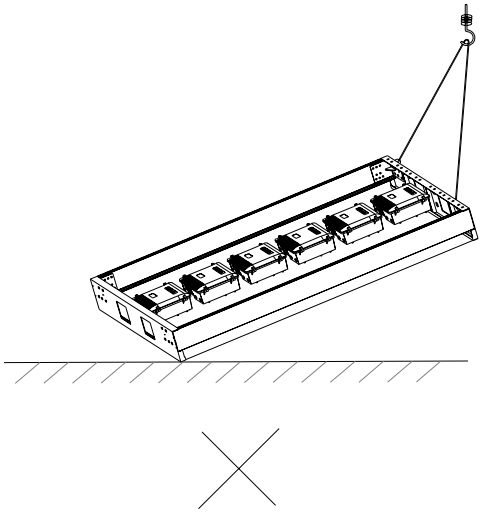

To mount hooks onto a block

Note to make out the up and down side of the Block.

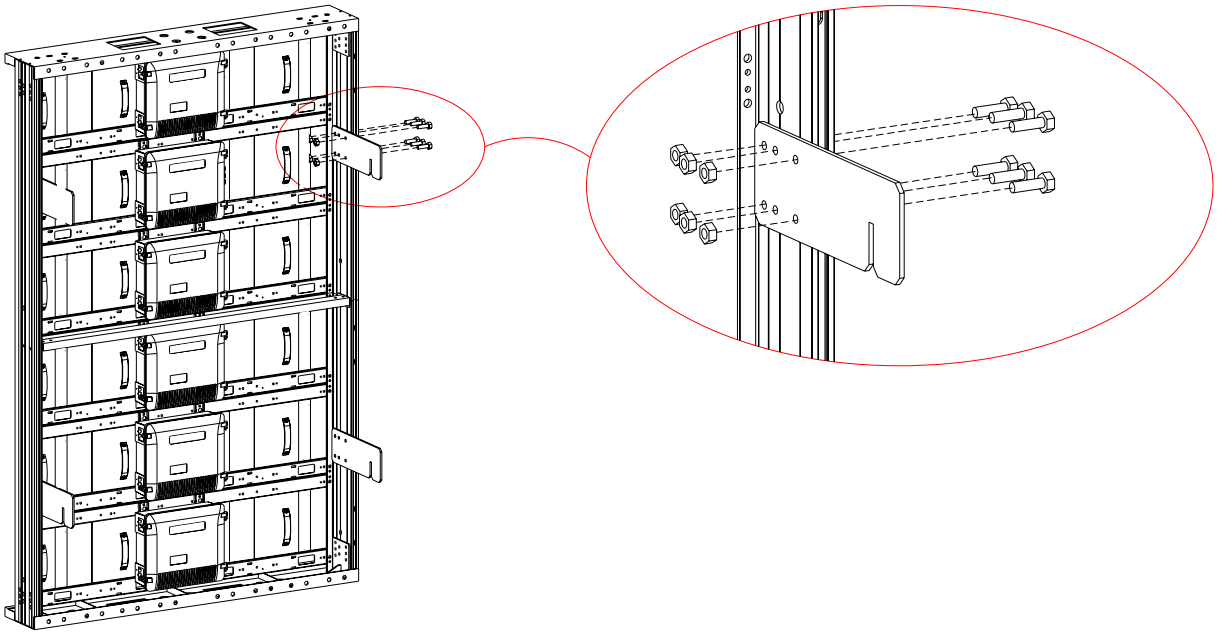

Remove the Block and lay it on its side. Fasten ey ebolts onto the top of the block and put it down. Hoist the Block.

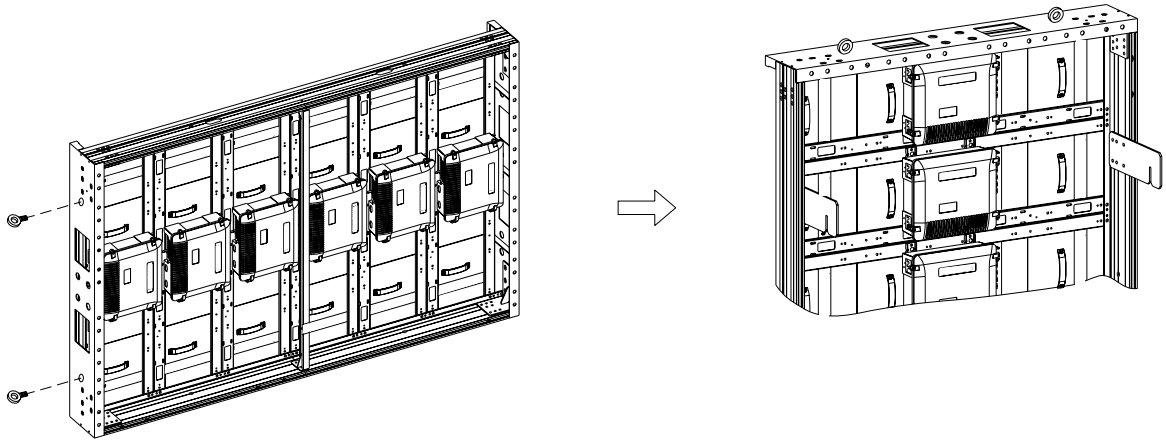

5.2.2 Mounting the Blocks

Before mounting blocks, one must make sure:

- The Blocks are ready to be installed and LEDs on them are intact.
- The supporting structure is in place, esp. the beams.
- The crane has the strength to hoist the Blocks and all operations at the installation site will be harmless.

Installation shall start from the middle. Make out the position for the middle block of a display and install this first block onto the supporting structure. Make sure all hooks on the block connect well with the beams.

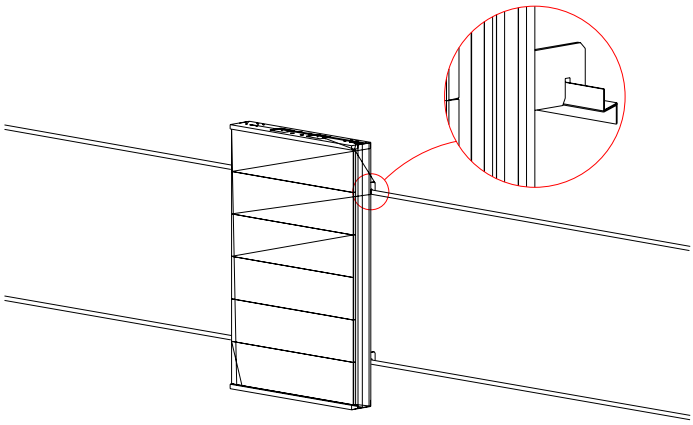

Then install the second middle block. After mounting it in position, use M12X80 bolts and nuts to connect the 2 installed blocks together. While connecting, make sure the 2 blocks are leveled so that pixels will be in the same level, too.

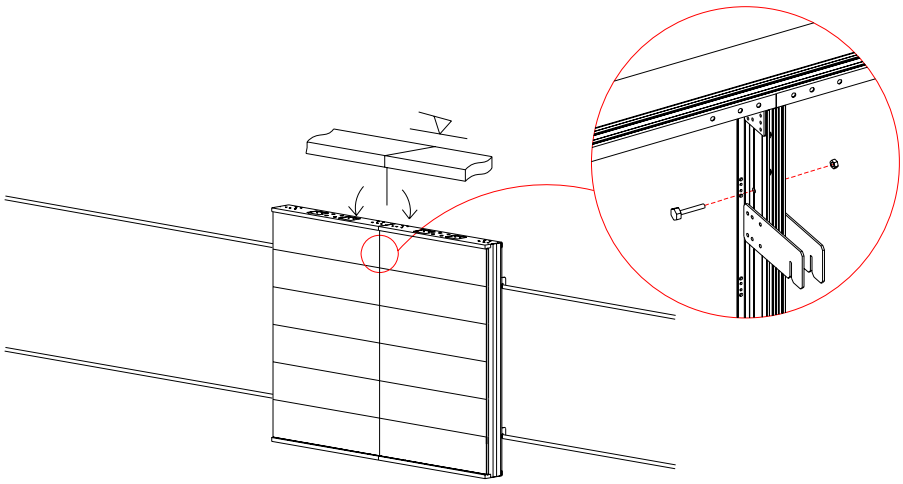

Install other blocks at both sides in order.
The following example shows how to mount Broadcast blocks:

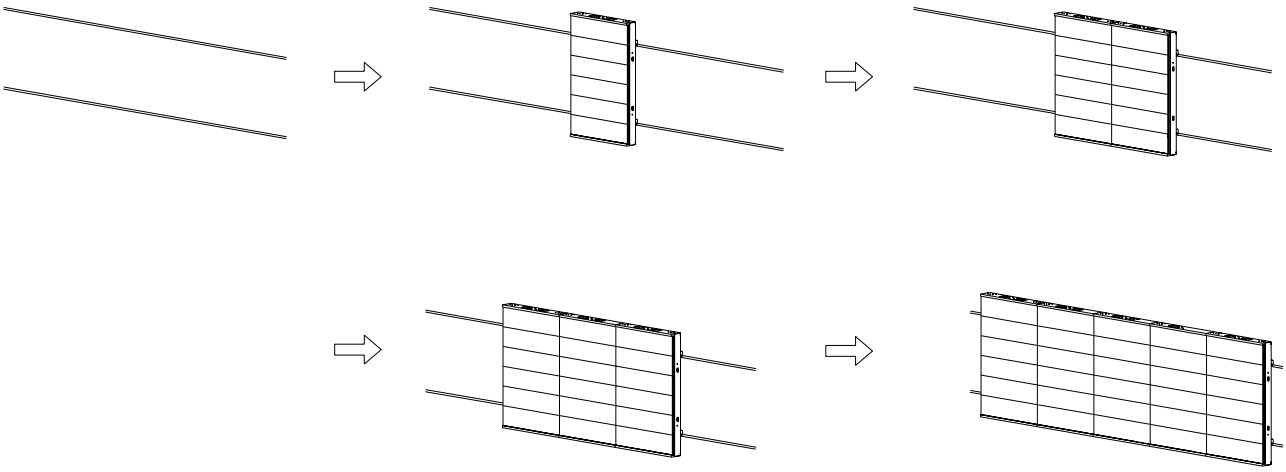

There is a sequence number on each block. Looked from the back, this number increases from right to left. Blocks shall be arranged in accordance with the sequence numbers while being installed. The special block, if any, is to be placed at the last, i.e. at the left end if looked from the back.

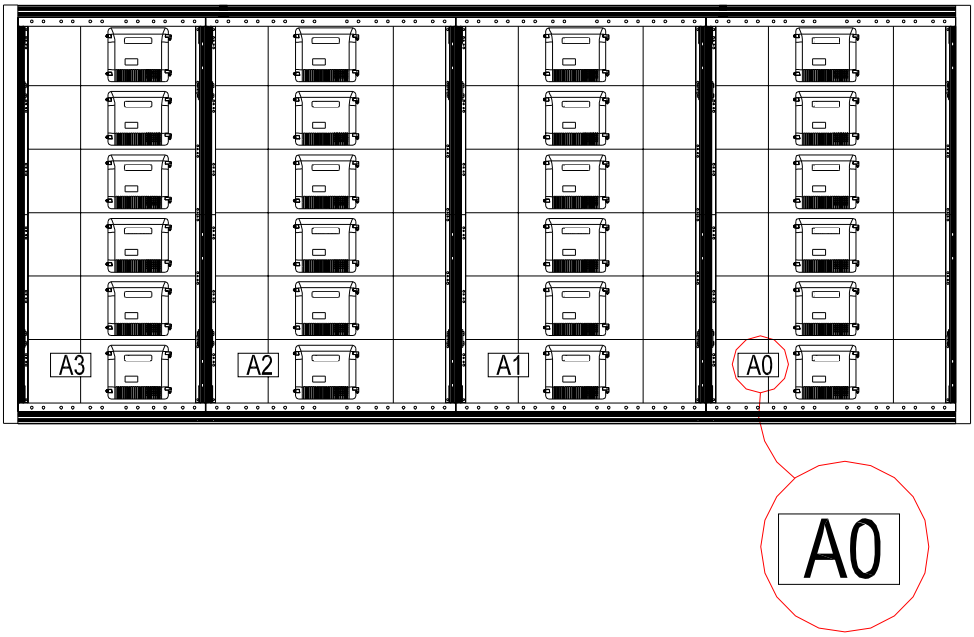

5.2.3 Fixing other structural components

After the blocks are installed, structural components shall be added to the display.

Mounting the top Beam and the bottom beam

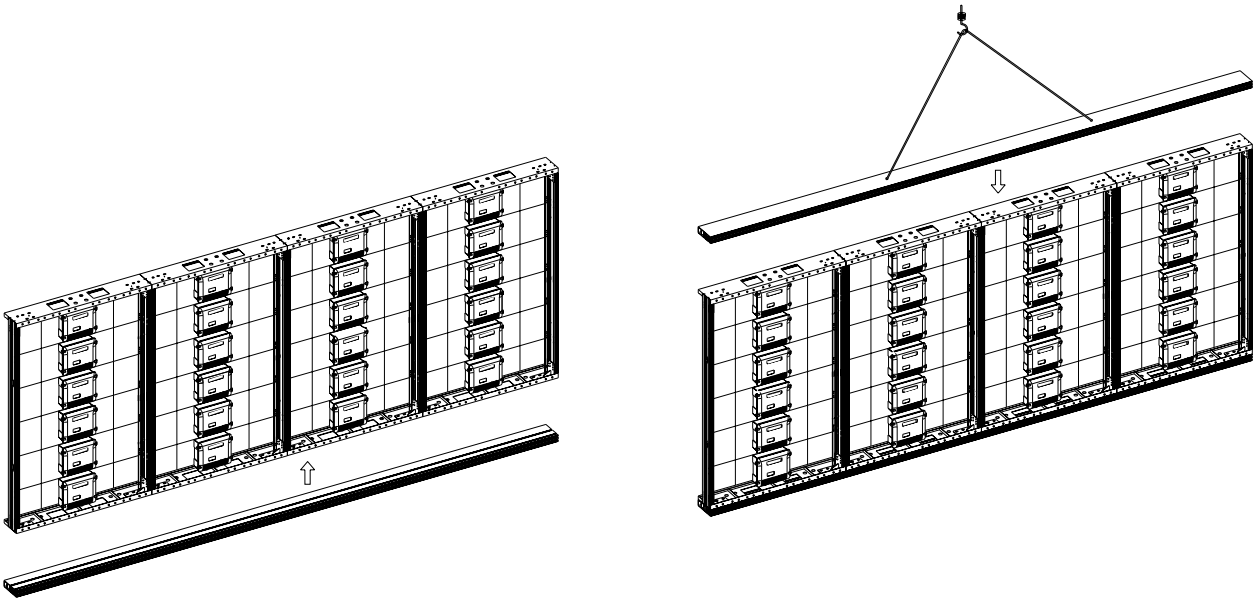

Fasten the top and bottom beam with the blocks with M12X35 bolts.

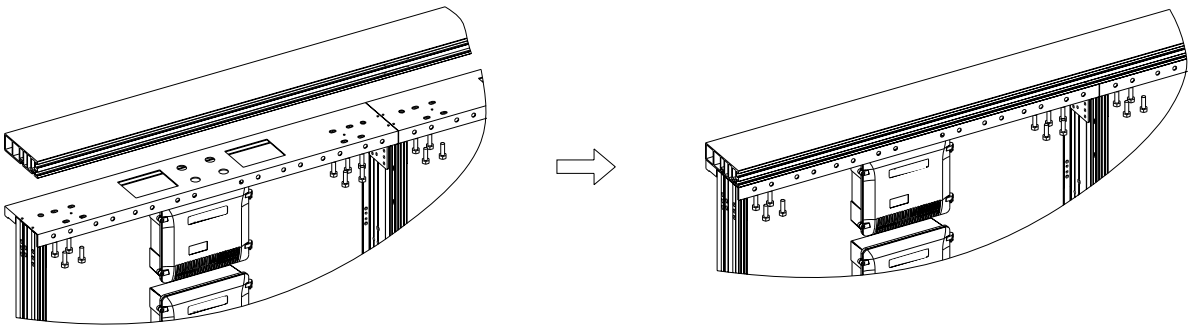

If the length of the display goes over 6m, the beam shall come in 2 sections which will be connected to each other while being installed.

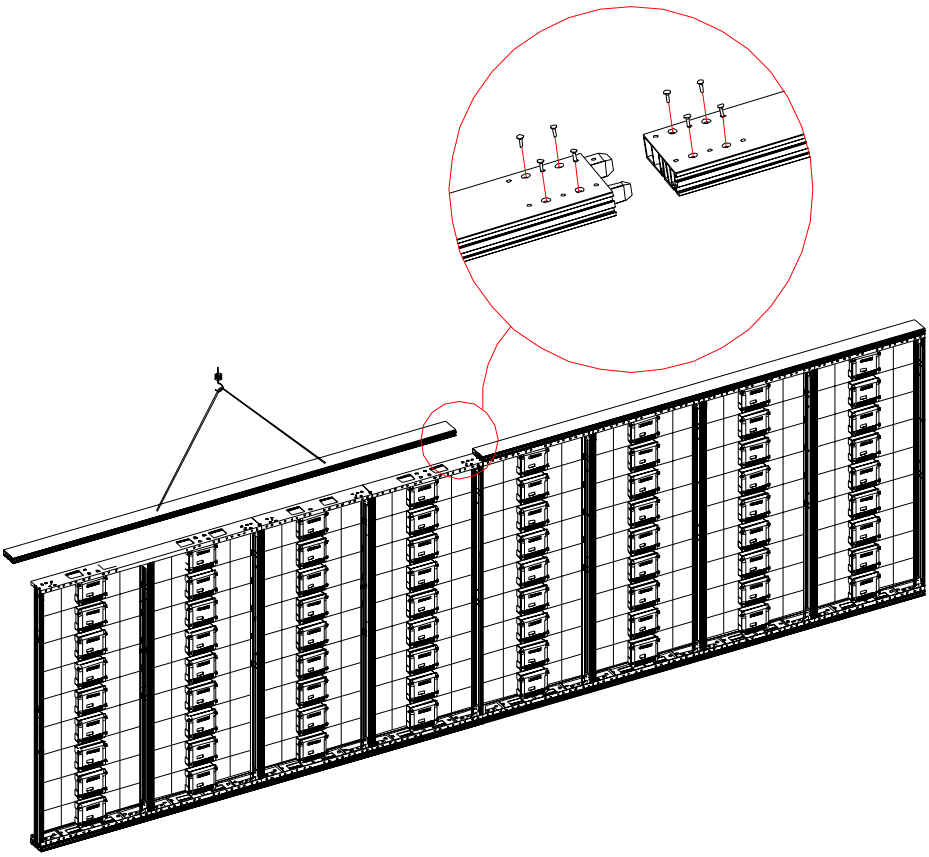

Mounting the side covers
Use M12X80 bolts to fix the side covers at both sides of the display.

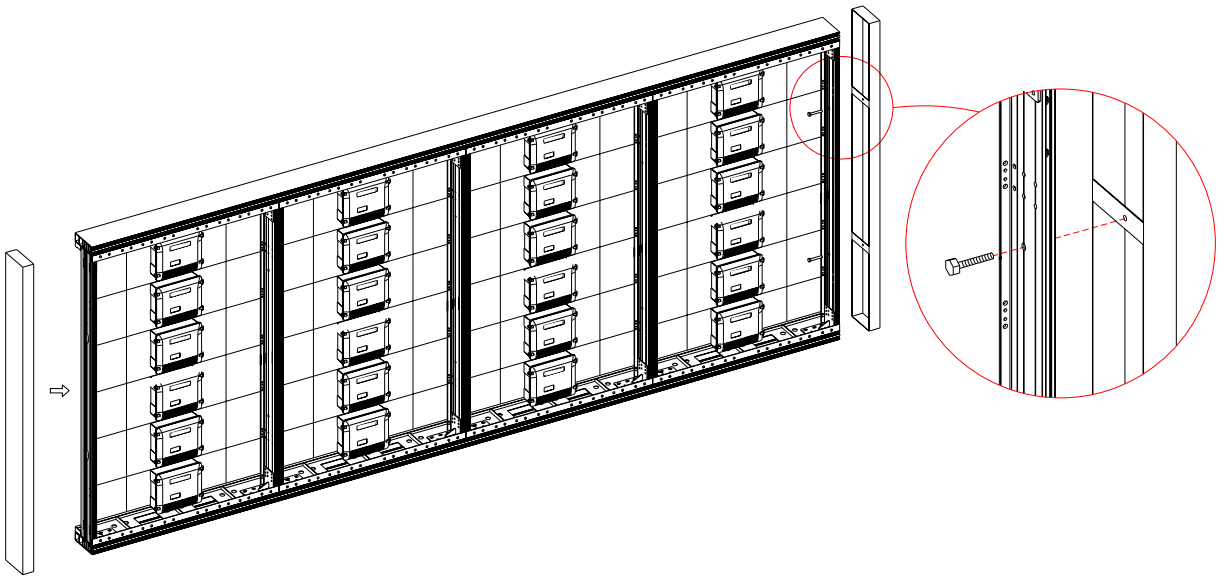

Mounting the Hooks protection chuck plate
A protection chuck plate is used to lock the hook, so that the block connected to the hook won't drop off the beams by any chance and c ause damage. Its required that one hook at the top and one at the bottom of a Block must be mounted with a protection chuck plate.

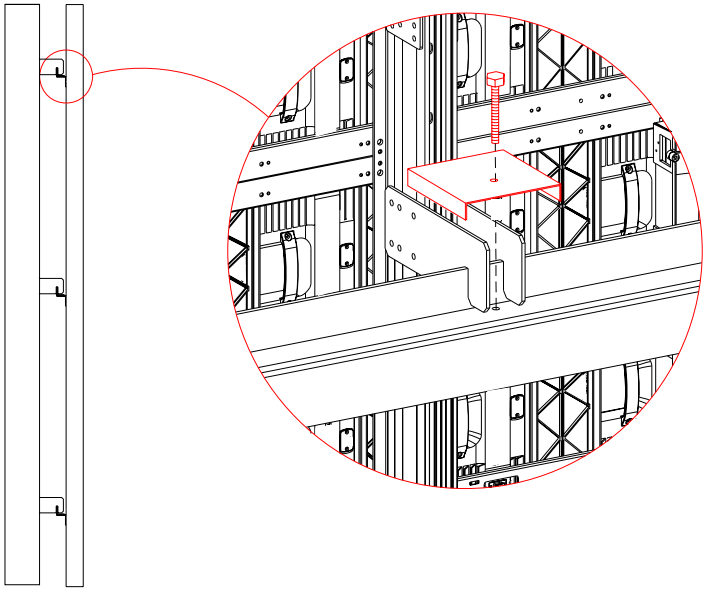

Choosing a location for the LDU and PSU

Where to place the LDU and PSU depends on the lengt h of cables connecting from the bottom of Blocks to the LDU and PSU. Therefore they are usually laid in the middle line of a place that is close to the bottom of Blocks at the back of the display.

5.3 Mounting a large Broadcast display

A large Broadcast display refers to a display that goes over 6m in height and has to be shipped in separate Units and block structures due to its excessive height and weight.

Necessary condition

- The display has to be shipped in separate Units and block structures due to over height and weight.

Necessary tools

- 19mm open-end wrench
- 19mm box-end wrench
- 8mm hexagonal screw driver
- Drill and 13mm drill bits

5.3.1 Mounting empty Blocks

For a large display, its block structure can sometimes be shipped as a whole (but without Units). Or it may have to be shipped in parts and reassembled into a whole on the site due to packing or transportation limits.

How to build up a block structure

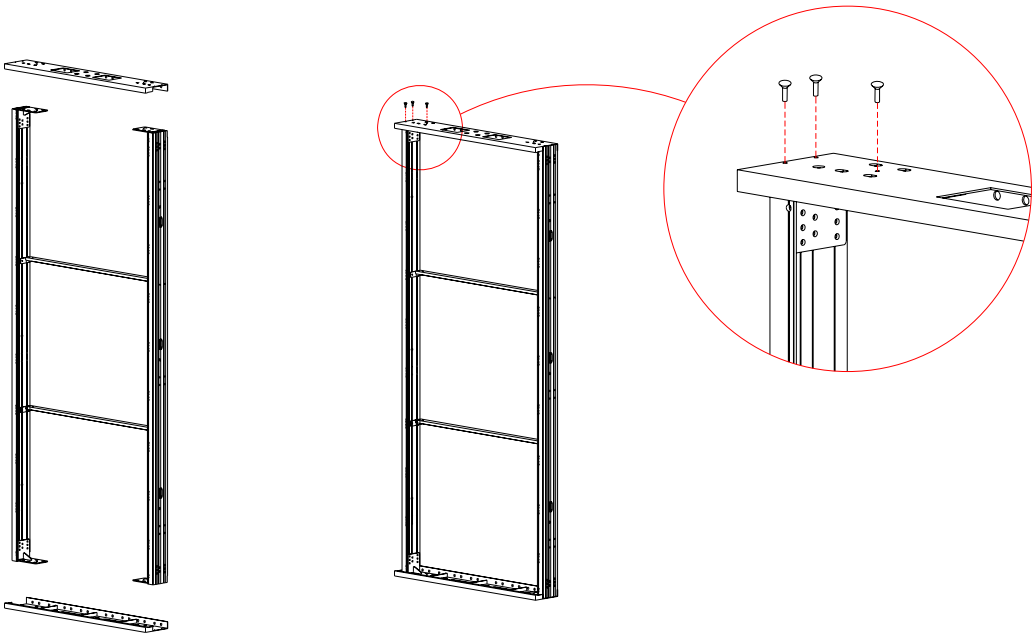

Having built the supporting structure and hanging beams, one can start to hang the block structures onto the supporting structure.

First, hang the middle block structure of the display in its should-be position in the supporting structure. Install other block structures towards both sides. When a block structure is put in position, attach it with its neighboring structure firm. At the same time make sure their top or bottom is at the same level.

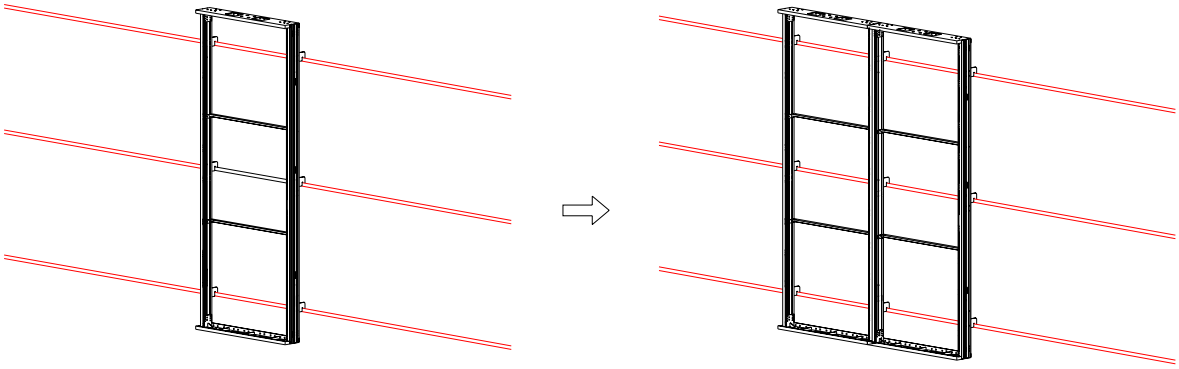

When Blocks are connected to the beams of a supporting structure with hooks, an extra top beam and a bottom beam should be added to the Blocks.

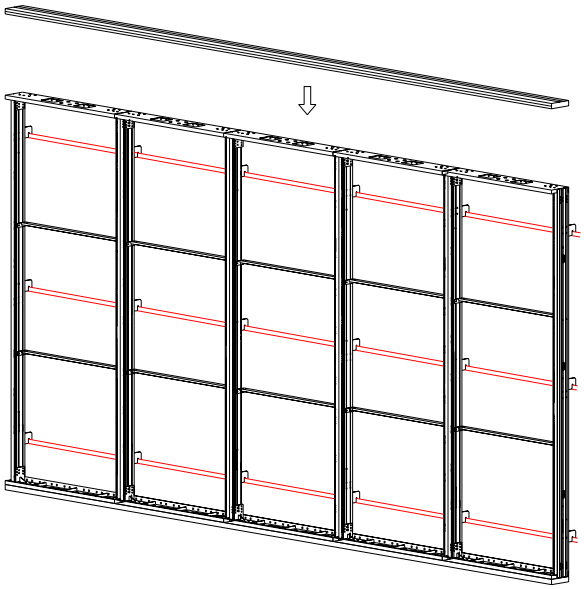

There are also other ways to fix the Blocks, say having them sit on a stout beam while using some other structural components to control the top of the Blocks.

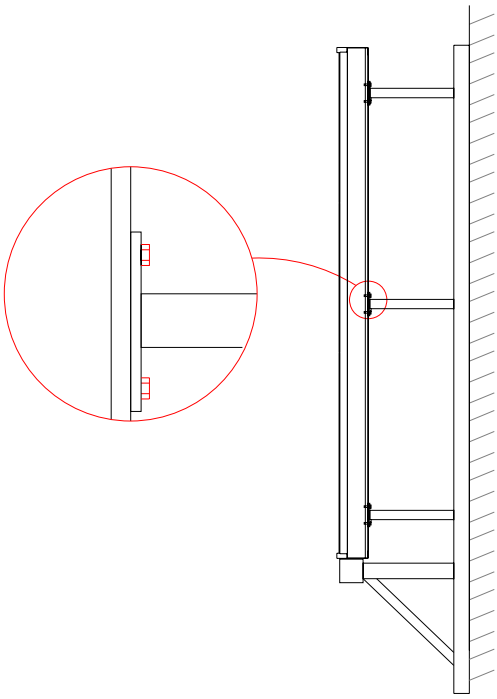

5.3.2 Mounting the Units

Install units onto the block structures with M8X20 screws and washers.

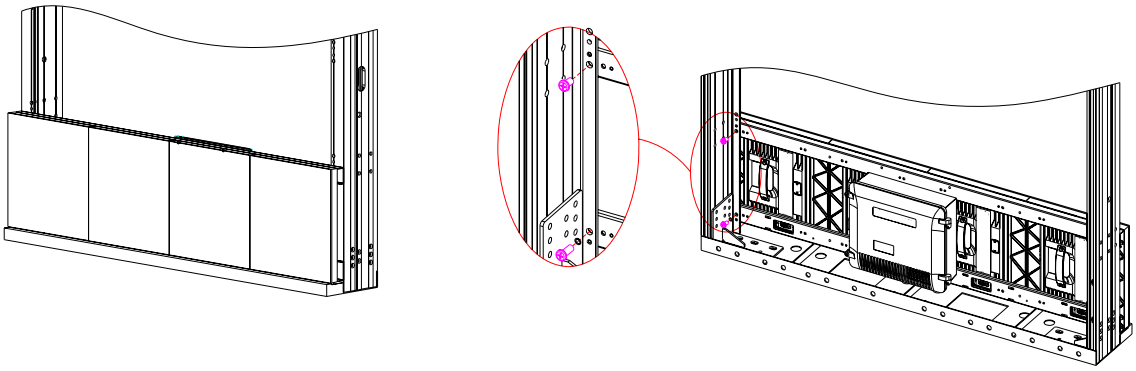

The Units shall be installed from the middle towards both sides and from bottom to top.

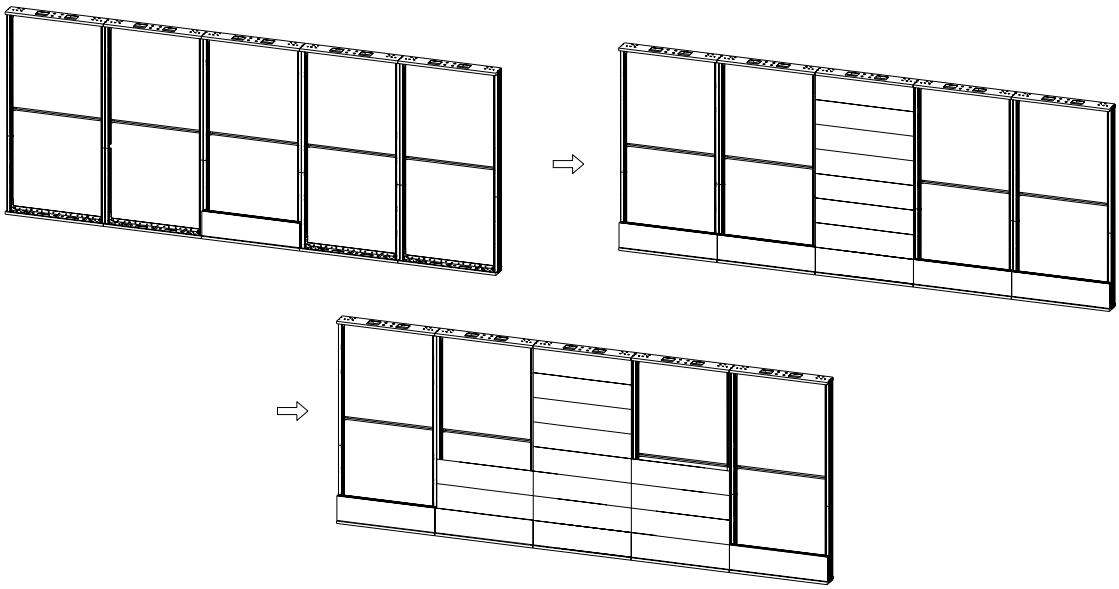

A display can be made with several batches of LEDs with mild color differences. To minimize the differences and ensure a good viewing effect, one is advised to install the units according to directions written on the label at the back of the Units, if not specified otherwise by the manufacturer.

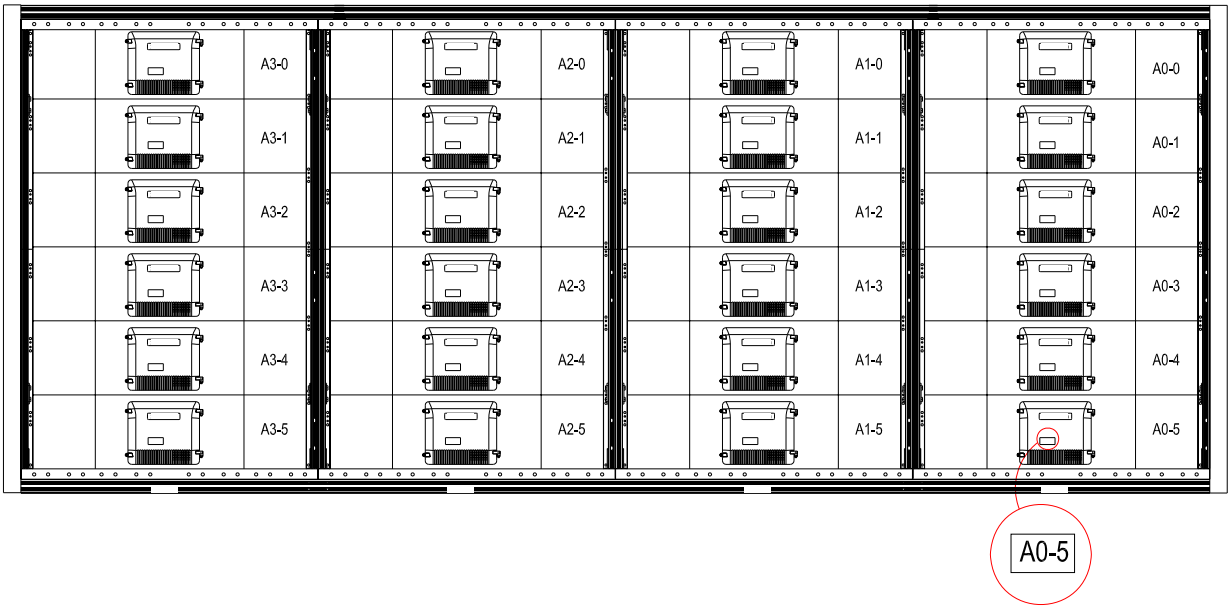

Fixing other structural components

Fix other structural components, including the hooks protection chuck plate and side covers, etc.

5.4 Mounting a small Broadcast display

A small Broadcast display refers to a display that is less than in height, or one that has less than units in its height. Such a display can be shipped in Blocks and assembled in the clients factory. Send the complete display to the installation site on a lowboy and hang it up. And installation finishes here. Needless to say, this helps save quite much time at the installation site.

Necessary condition

- The display can be shipped in Blocks
- There is a work ground available for assembling the Blocks into a display
- The display can be sent to the installation site as a whole
- A crane is available for use at the installation site

Necessary tools

- A crane
- 19mm open-end wrench
- 19mm box-end wrench
- Drill and 13mm drill bits

5.4.1 Assembling the Broadcast display

A workshop together with a hoist is required for assembling the display.

Lay the bottom beam, mount hooks on the Blocks, and put a marginal Block at the correspondent end of the beam with the help of the hoist. Use a temporary supporting structure to hold the Block. Hoist and fix other Blocks onto the bottom beam in order. Then lay the top beam, mount the side covers and eyebolts, etc.

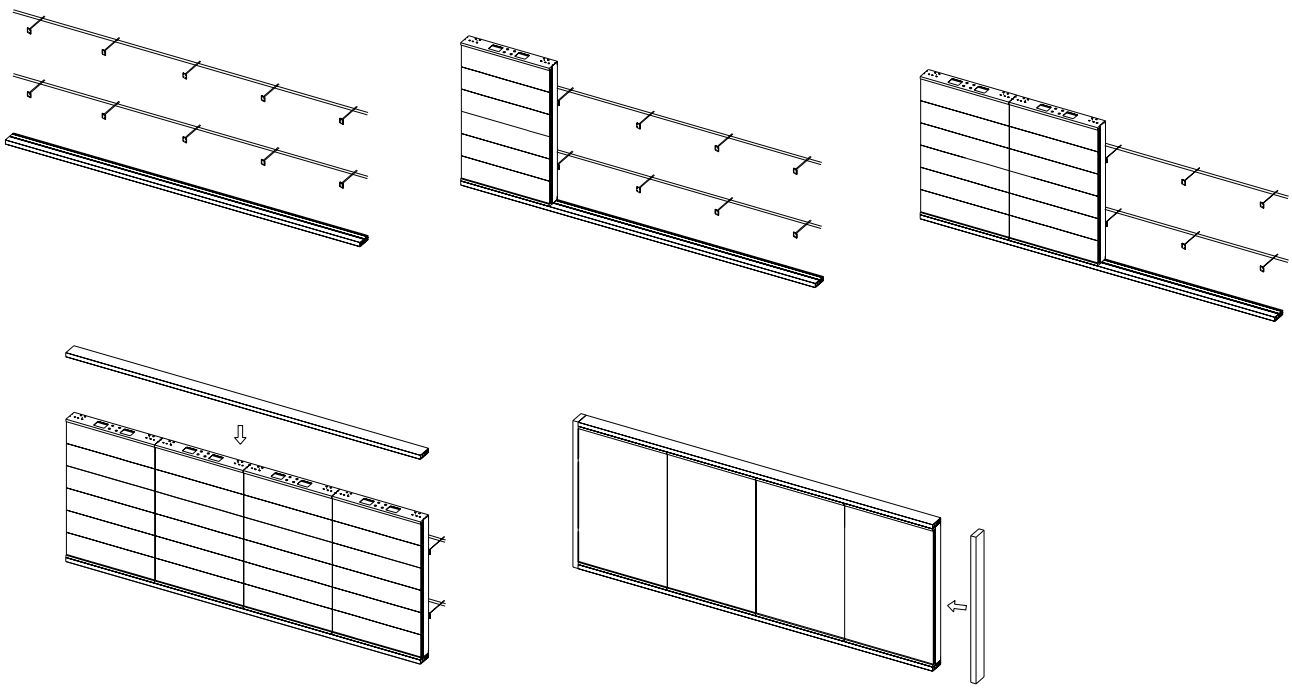

A temporary supporting structure at the back is required to fix the Blocks in an erected position. The following drawing exemplifies how a temporary supporting structure can look like.

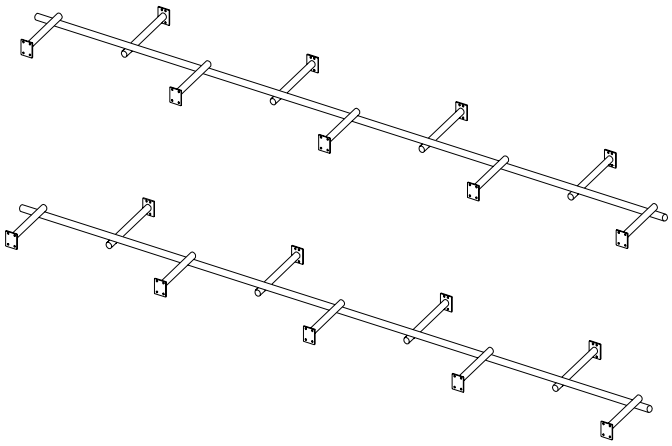

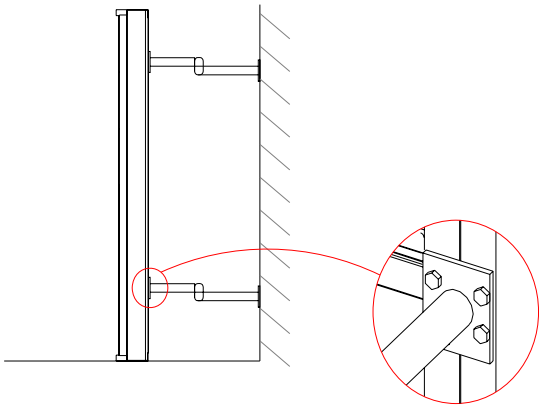

5.4.2 Mounting the small Broadcast display

When the supporting structure has been built, send the display to the installation site. Hang the whole display onto the supporting structure and mount the hooks protection chuck plates. In this way installation can be done at the site in a short time.

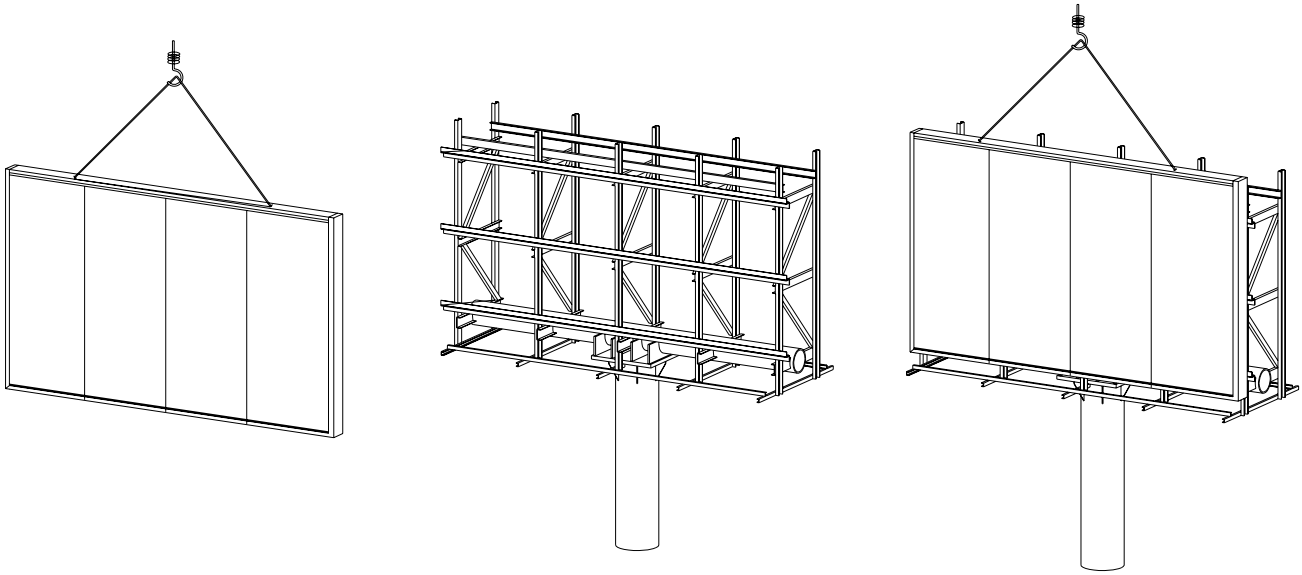

However, if the display is too long to be shipped as a whole, one can separate the display into 2 parts. Assemble these 2 parts in the workshop and send them to the installation site. Hang them up onto the supporting structure and connect them to each other.

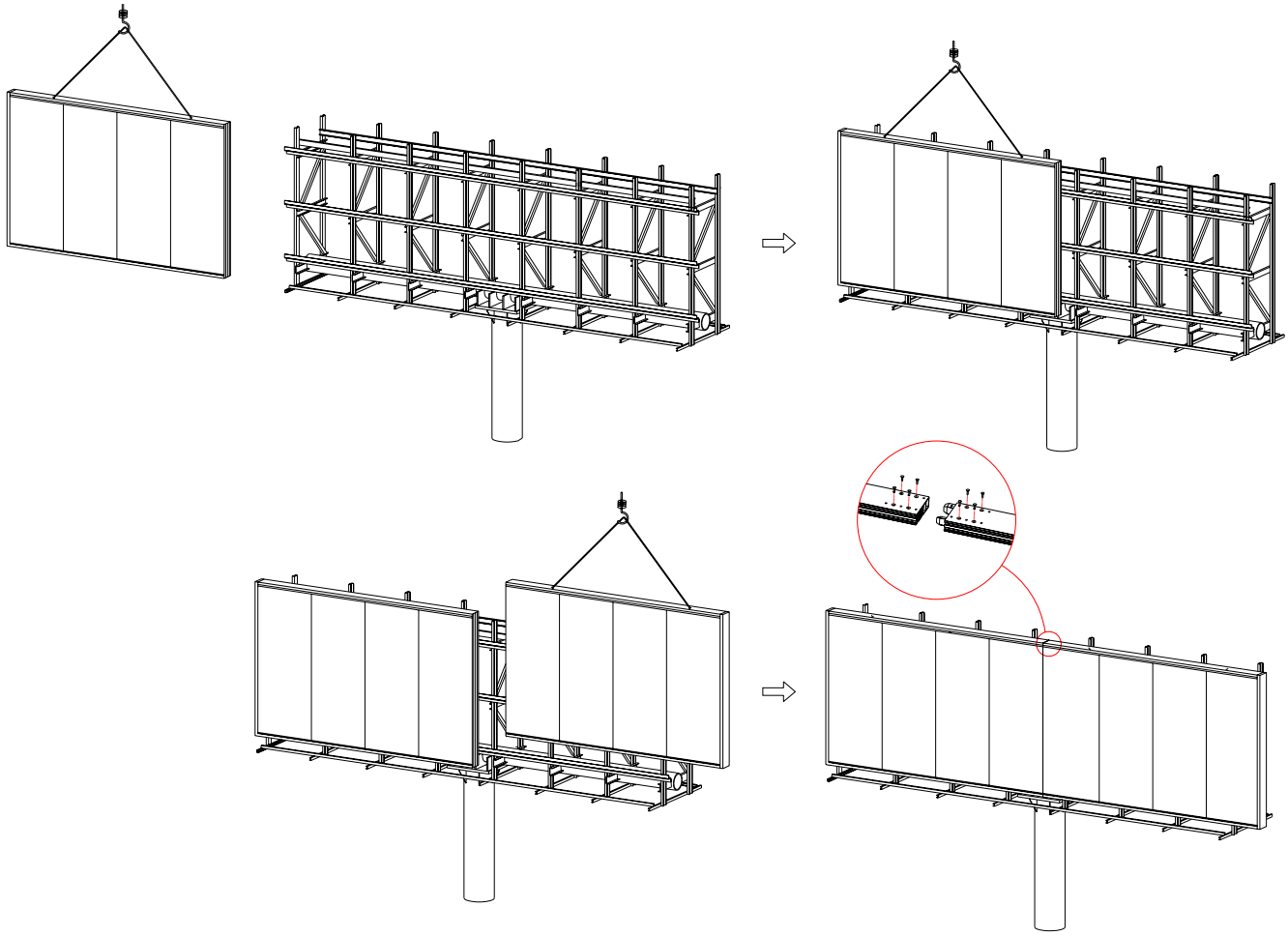

5.5 Mounting a front serviced Broadcast display

In installation sites where there is no room for back maintenance, a front serviced Broadcast display shall be used. The supporting structure for such a display is usually directly mounted on a wall. It alike uses beams to connect with hooks on the Blocks.

A front serviced Broadcast Tiles and Units

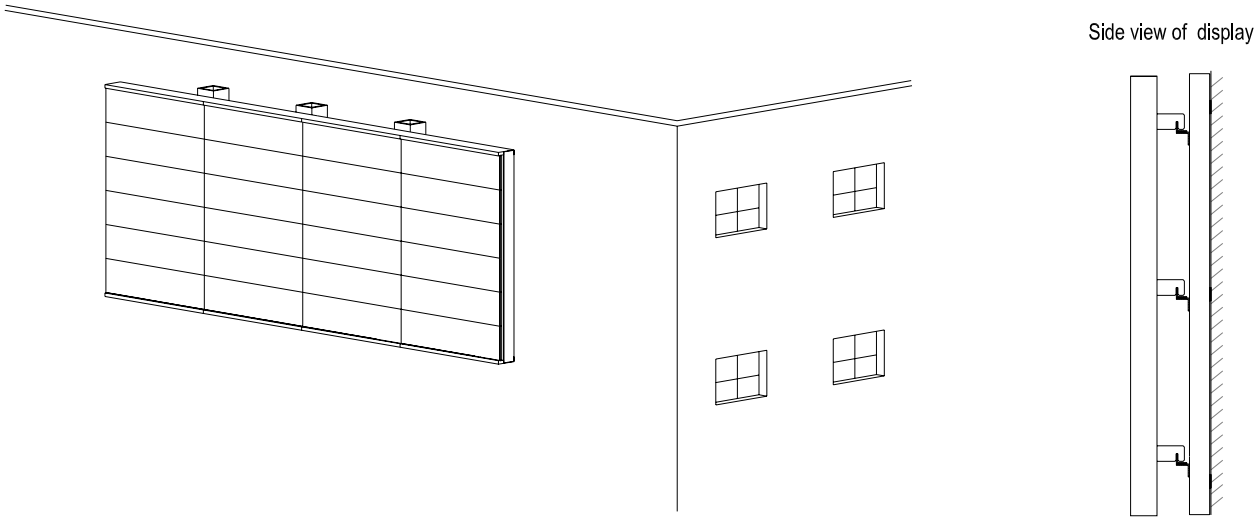

Necessary tools

- A crane
- 19mm open-end wrench
- 19mm box-end wrench
- Drill and 13mm drill bits
- 4mm quincunx head screw driver

5.5.1 Preparing the supporting structure

A qualified supporting structure shall features:

- The beams on the supporting structure are leveled;
- The connection positionson the beams correspond to hooks on the Blocks;
- All beams on the structure are at the same installation plane.

View of a typical supporting structure:

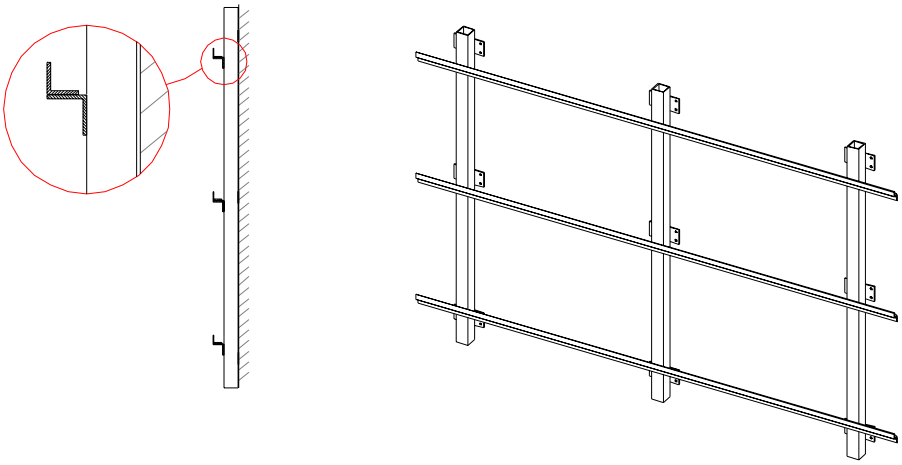

5.5.2 Preparing the Block

As their operations can only be carried out at the installation site, tiles that come with hooks or other connection positions need to be removed from the Blocks while preparing the Block. Or they have been removed and packed separately before going out of factory. Other Blocks can be handled as a typical one.

View of a Block before installation

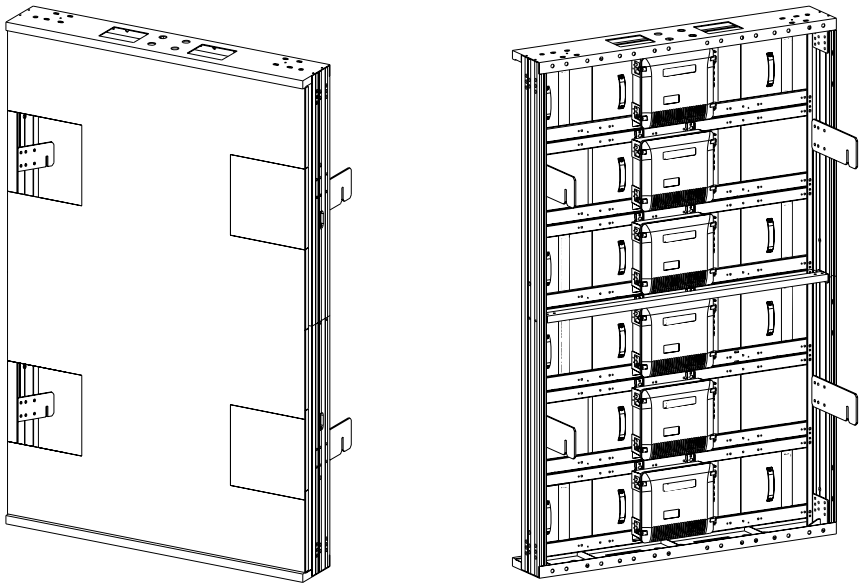

5.5.3 Mounting the Blocks

CAUTION: Before the Blocks are mounted onto the supporting structure, make sure signal cables and power cables on them have been properly connected with plugs placed at the bottom. Once the Blocks have been erected, there is no way to do the cabling any more.

As with ordinary Blocks, one shall start with the middle Block and then go on to install others on both sides. While a Block is being installed, make sure the hooks connect with the beams of the supporting structure properly. Connect neighboring Blocks with M12X80 bolts. Note that the Blocks should be at the same level after being installed.

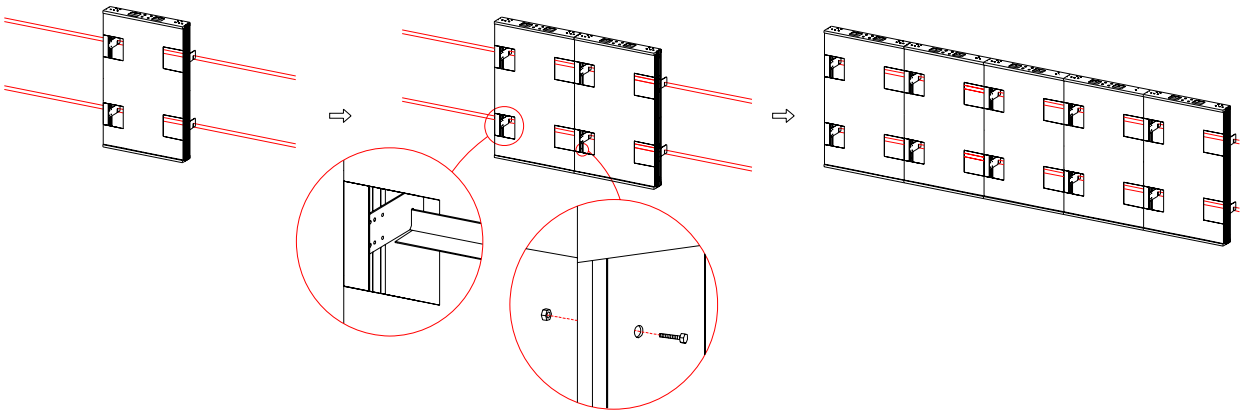

Fixing other structural components

After all Blocks have been installed, mount the hook protection chuck plate, the top beam and the bottom beam, and place the side covers.

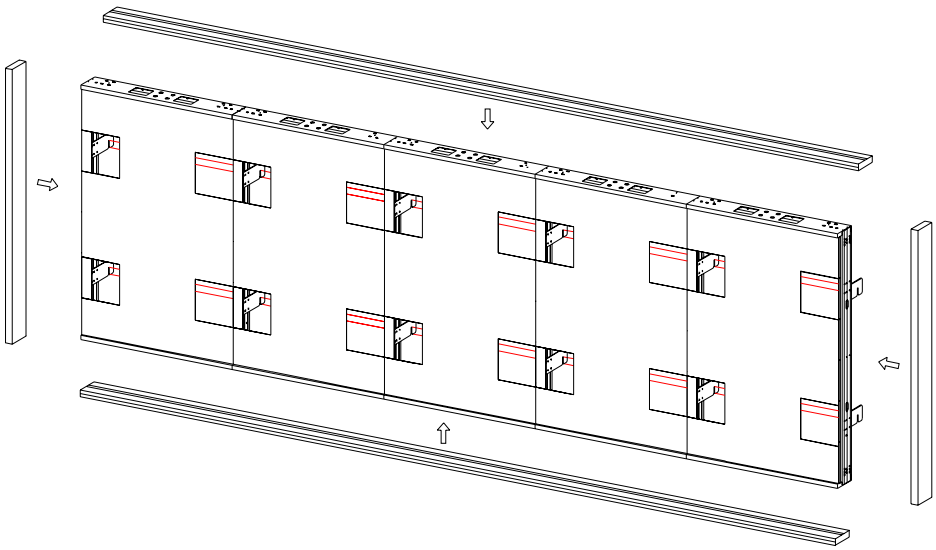

Then put back all tiles that have been taken off of the Block earlier. Please see below for instruction:

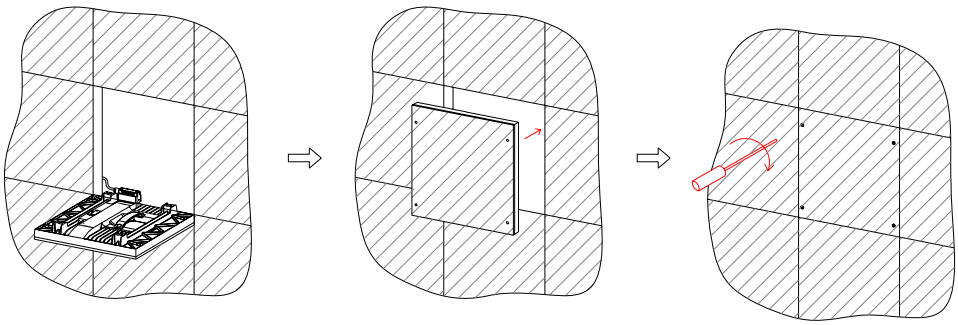

CAUTION: Before putting back tiles at the bottom, make sure all signal cables and power cables on the Blocks have been connected well.

5.6 Typical mounting of a block structure

There are many ways to connect the blocks with the supporting structure. The simplest way is to resort to hooks. Or one can turn to bolts boards for help or have the blocks sit on a structure beam, etc. Any method that provides sufficient strength to hold the Blocks shall in effect work.

How Hooks connect the Blocks with the supporting structure

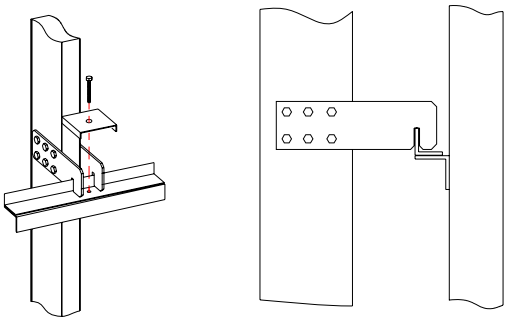

How Bolts Boards connect the Blocks to the supporting structure

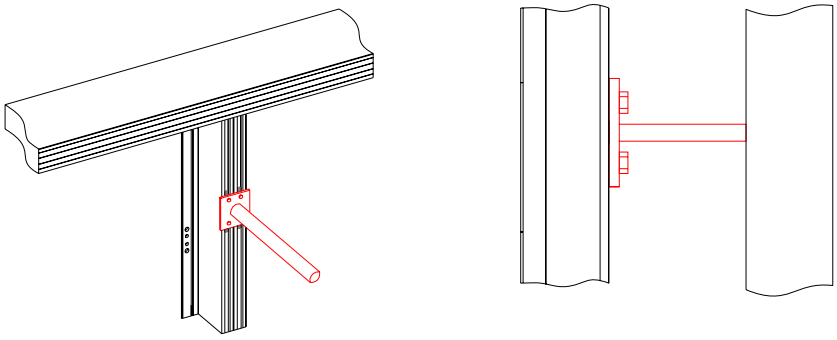

How Blocks sit on a structure Beam

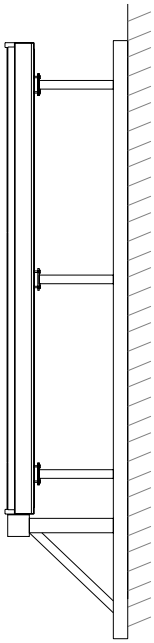

TIPS：The Block structure, the top beam and the bottom beam all have a slideway at its back. Movable M12mm nut blocks can be put inside to enable the Block to be fixed anywhere on the supporting structure with M12X35mm bolts and washers.

Holes need to be drilled in positions on the slideway where bolts are to be used to allow space for them (the bolts). But usually these holes have been drill before the goods go out of factory.

If one has to use bolts where there is no hole fo r doing so, he can use M 12X35mm bolts that have been added with a M12MM nut instead. Fasten the bolt with a wrench and then screw the nut fast.

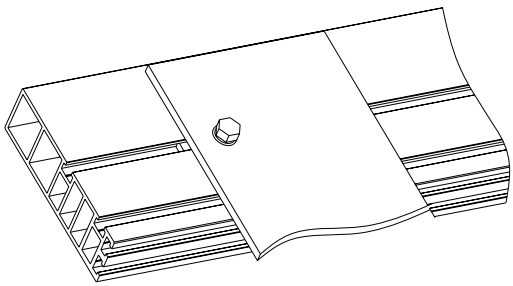

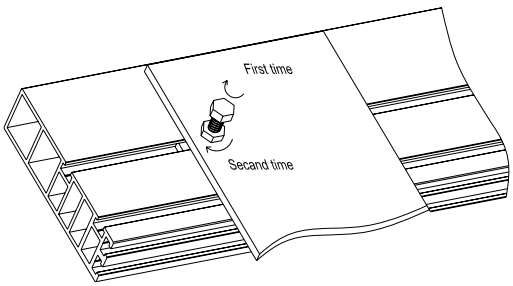

6. Cabling a Broadcast display

This chapter covers the system cabling and ground protection of a Broadcast display.

Overview

- Cabling between Units
- System cabling
- Grounding
- Pixel limitations

Necessary tools

- 6mm Cross head screw driver
- 6mm hexagonal key

6.1 Cabling between Units

A Broadcast display is usually shipped in Blocks. Units have been installed on the block structure before they go out of factory. But if the display is over-sized and its units have to be installed at the installation site, it means one has to do the cabling of units at the installation site as well.
Cables here refer to the signal cables and AC power cables for the units.

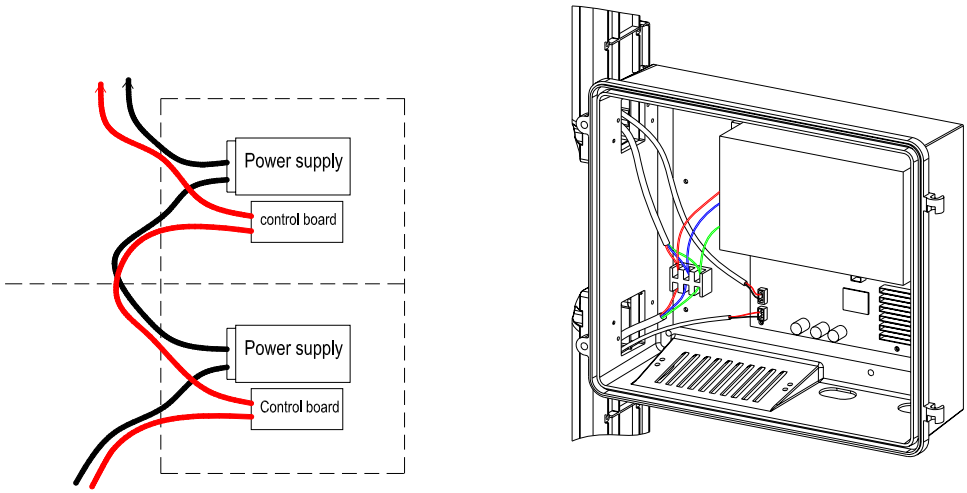

Mount the cable covers between the units, open the door of a pow er box, and connect the signal cables and AC power cables to the power box of the next Unit through the cable covers.

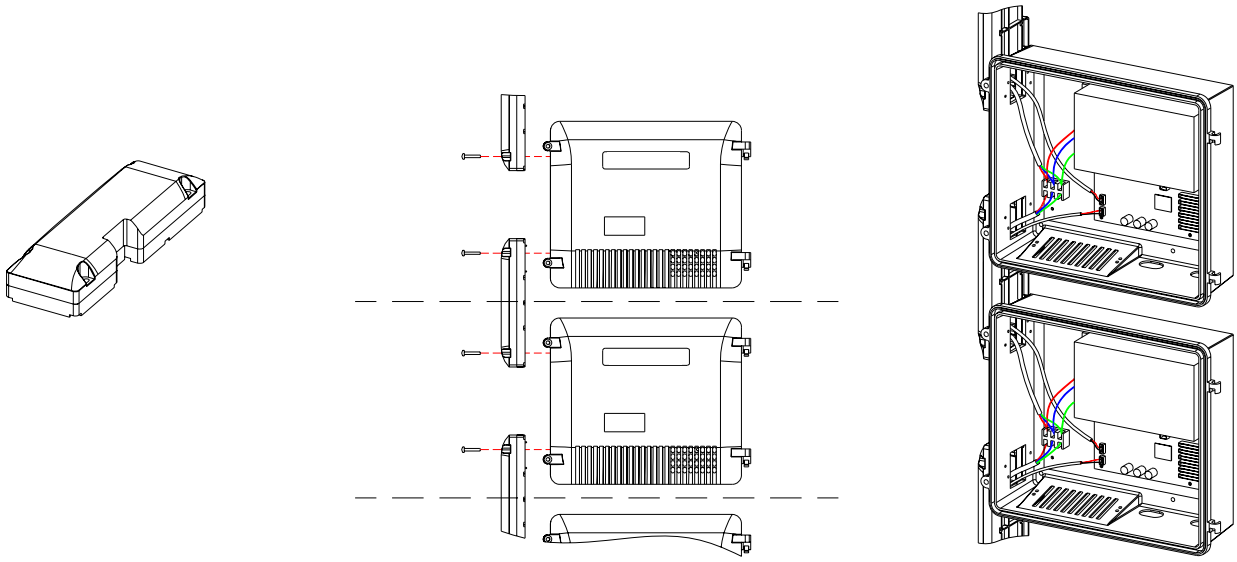

CAUTION: Before closing the door of the power box, check if the signal cable and AC power cable have been correctly connected, if the plug is in place and if the screws have been fastened.

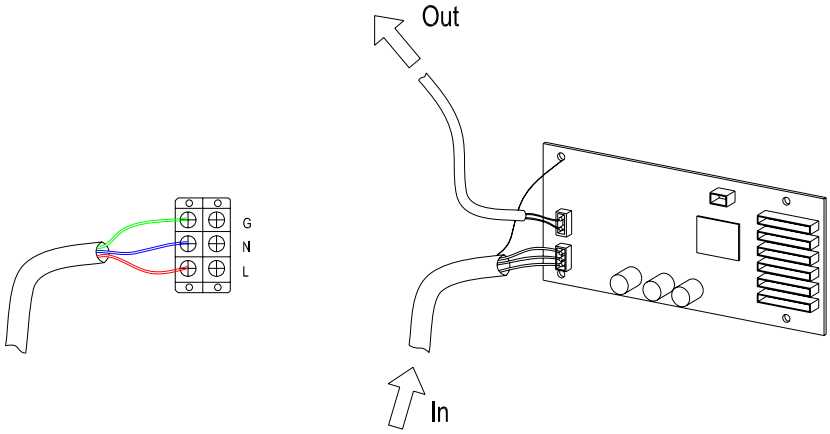

6.2 System cabling

A Broadcast display, when configured properly, can be used either as an on-line display system or off-line display system。

6.2.1 Cabling an on-line Broadcast display

An on-line Broadcast display can display various kinds of video files, such as AVI, MPEG2, etc., or can be directly connected to various kinds of live video sources.

An on-line Broadcast display system wiring diagram

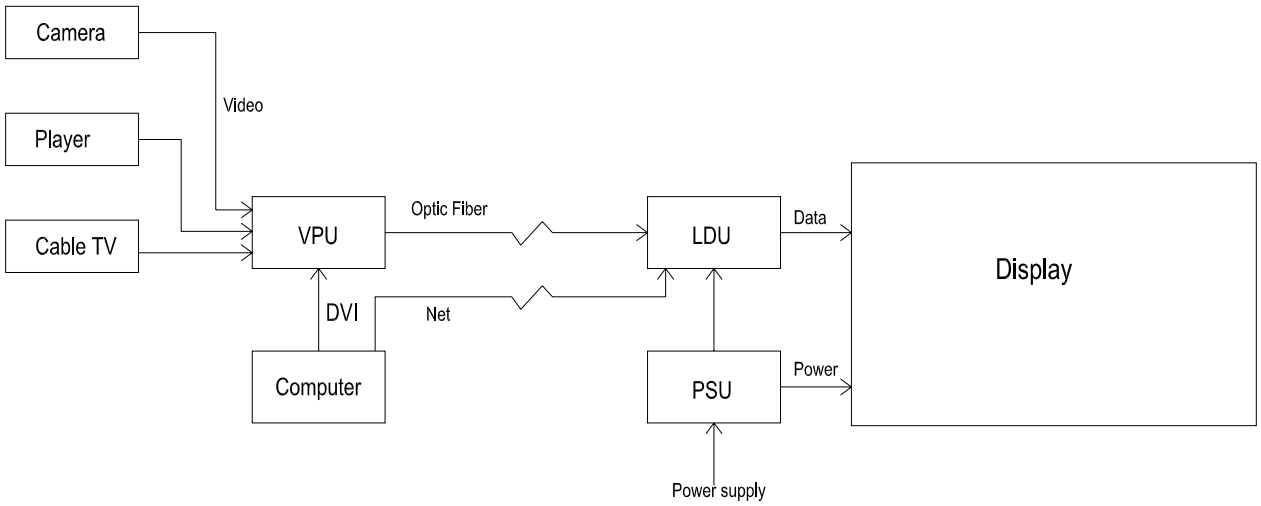

Example of an on-line Broadcast display

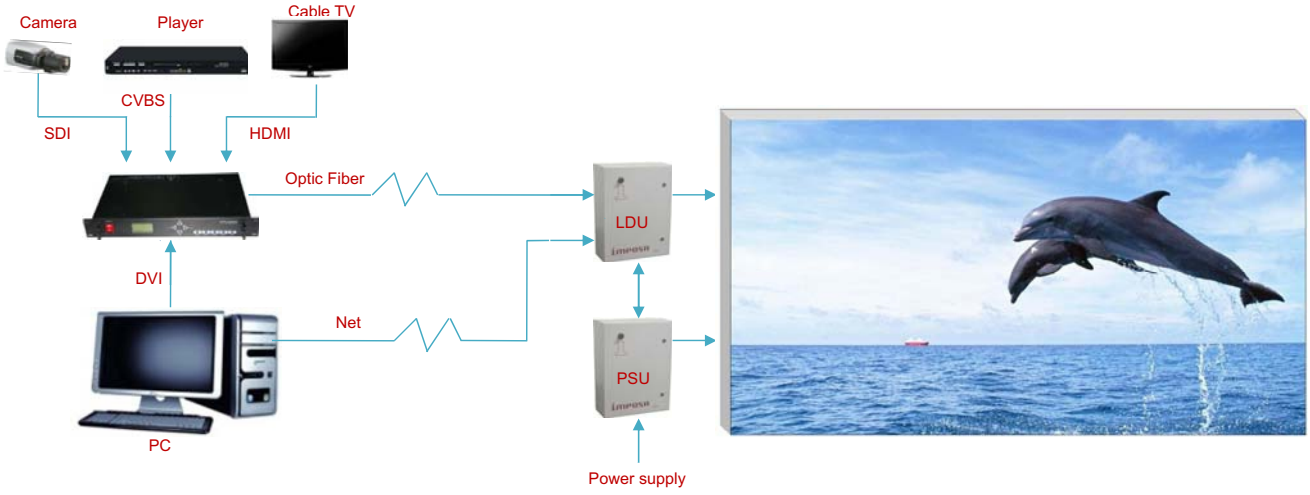

6.2.2 Cabling an off-line Broadcast display

An off-line Broadcast display system is usually used to display graphic or image, or even video files for advertising purposes. It is especially useful for an interconnected digital billboard network.

An off-line Broadcast display system wiring diagram

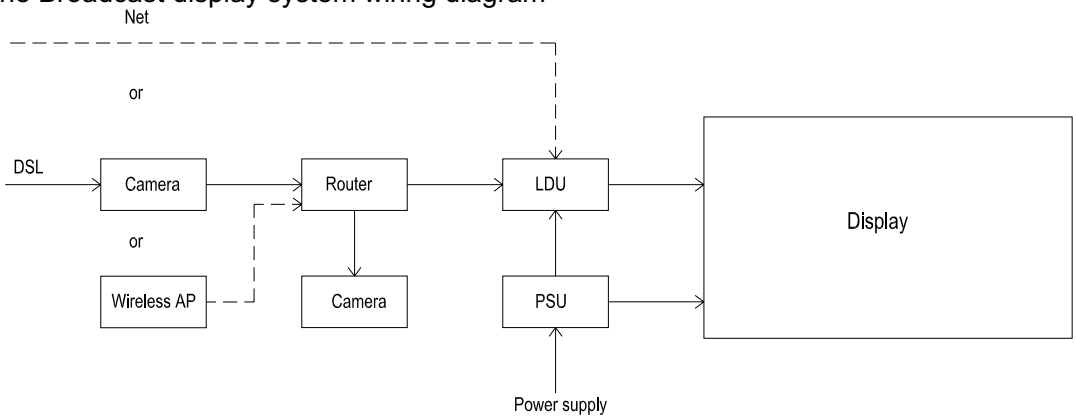

Example of an off-line Broadcast display

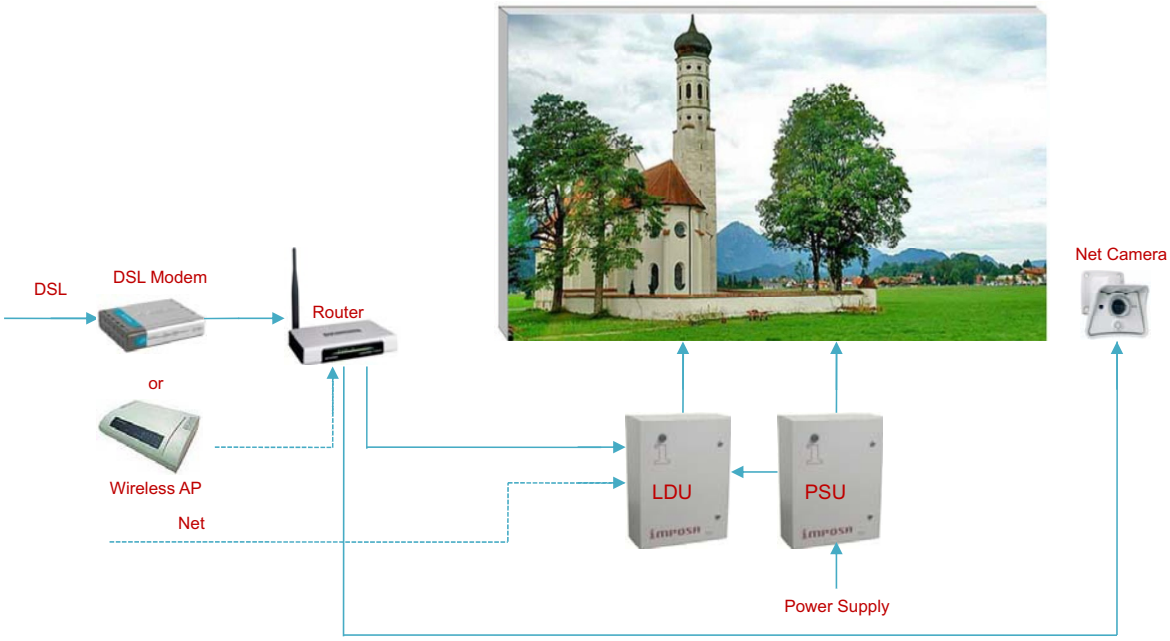

6.3 Grounding

All displays, especially outdoor displays, MUST be grounded. Those displays installed on top or attached to a building can be connected to the earth line of the commercial power grid. However, for those displays that stand alone in the open, apart from grounding connection to the commercial power grid, an independent grounding system for the LED display MUST ALSO be equipped.

Example Grounding of a display

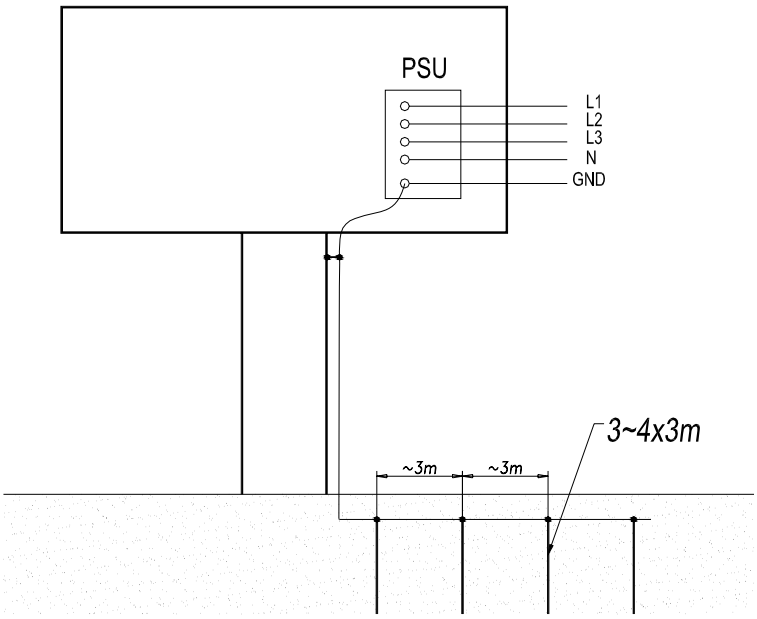

If the LED display is installed in an area where lightning strikes are frequent, and if the display is installed on a stand-alone structure in the open ground, a lightning rod is absolutely required on top of the LED display.
The lightning rod of the LED display should be 2~3 meters higher than the display, and the rod metal and its lead must be insulated from the installation structure of the display. The lightning rod must be grounded independently and must be strictly isolated from the power supply.

Example of a display lightning rod installation

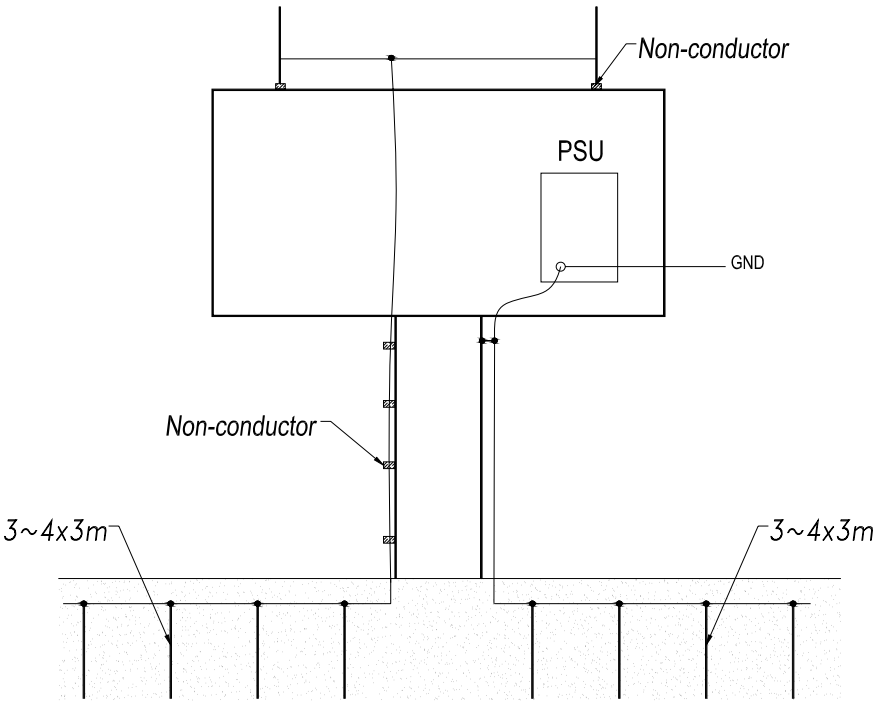

6.4 Pixel limitations

The Broadcast display system supports a dot matrix resolution of up to 1920X1080 pixels. However, the signal distribution system LDU only supports up to 1024X768 pixels. That is to say, an LED display larger than 1024X768 pixels would need a special LDU connection arrangement.

6.4.1 Limitation of signal connection

Due to the pixel limitation of the LDU, an LED display larger than 1024X768 pixels would need more than one LDU to support the distribution of signals. When multiple LDUs are connected together, the right starting point of each LDU on a picture must be appointed and preset.

Example: Signal connection of a display with 1280X576 pixels

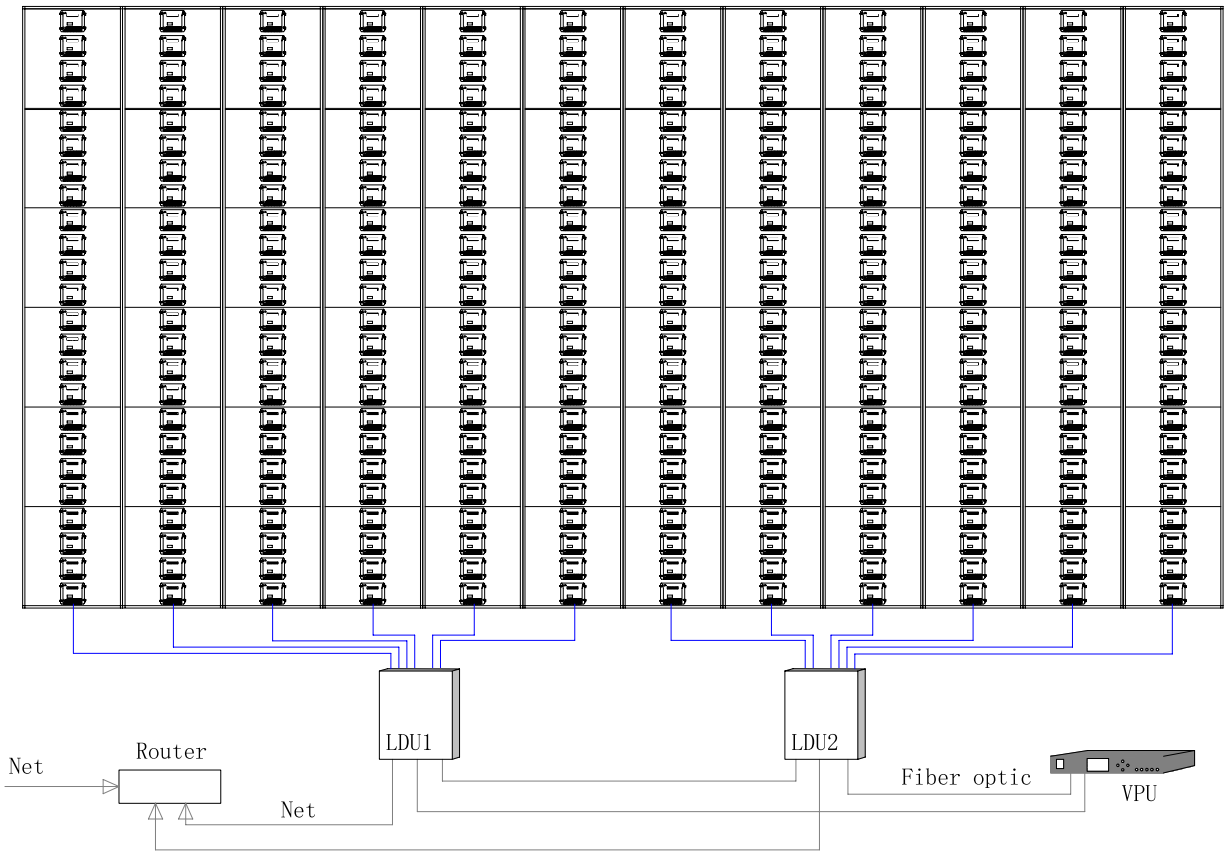

6.4.2 Limitation of power connection

As a rule, one block of an LED display is connected by an AC power cable to the PSU for power supply. However, if the display is extremely large and comprises of more display tiles than could be supplied by one power cable due to cu rrent restriction, it becomes necessary to use multiple power supply cables which need to be connected to different power output terminals at the PSU.

The following table lists the height limitation to the number of blocks for the various models of the Broadcast series displays. More power supply cables are required if the display height exceeds the limit.

	AC120V power supply	AC220 power supply
VFO13.3 Maximum supportable tiles on one power cable	6	10
VFO16,VFO20,VFO26.7 Maximum supportable tiles on one power cable	8	12

Example: Power supply connection of a display with 960X600 pixels

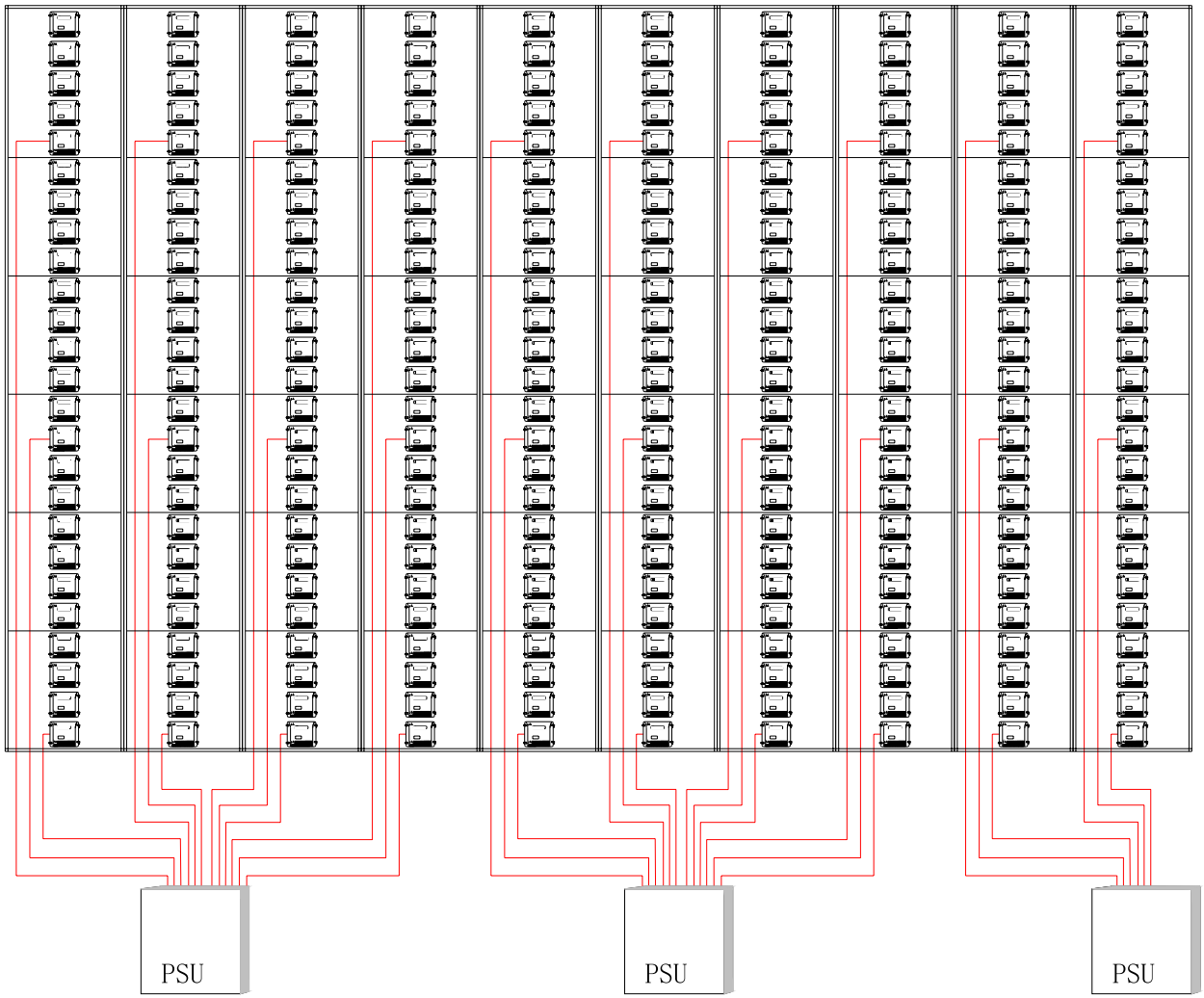

7. Maintenance

Overview

- Firmware update
- Replacement of a Tile of Broadcast display
- Replacement a of Tile of a front service Broadcast display
- Replacement a of power supply of unit
- Replacement a of unit control board
- Replacement a of LDU control board
- Cleaning the tile masks

7.1 Firmware update

Control boards in both LDU and display unit may need firmware updating in actual use.

7.1.1 LDU firmware update

There are 3 ways to update the firmware on the control board QS5800 in the LDU:

1. Use the update package QS5800_update packet_verxx.xx_(year/month/date).rar to update the firmware
   Steps: connect the display to a PC via an Ethernet cable, decompress the package in the PC, and double click the update.bat in the file to start the automatic update process.

2. Use the update package QS5800_update packet_verxx.xx_(year/month/date) (for USB).rar to update the firmware
   Steps: decompress the package in a USB disk, connect the disk to the QS5800 control board and the update process will start automatically.

3. Use the update file xxxx.cpu.
   Steps: Log onto the software Sigma 3000, choose Tool---Update---Update CPU and then select the file xxxx.cpu to start the update process.

7.1.2 Updating the display unit controller firmware

There is a QS5242 control board inside the power box of each Unit. Following steps shall be observed to update the firmware on these control boards:

Log on the software Broadcast Tools and choose "maintemance" where you can choose a certain Unit address or choose All Units for updating the firmware on their control boards.

Select the following files in sequence for updating:
File xxx.bin -----the CPU program for the control board. You can find it in the File Style menu presented as CPU program for tiles?
File xxx.bin -----the data file of the control board. It can be found in the File Style menu presented as drive Board data?
File xxx.rbf -----the FPGA program for the control board, presented as "FPGA for tiles" in the file style menu;
File xxx.rbf -----the gamma data of the control board which can be seen as ″gamma Date for tiles" in the File Style menu;
File xxx.bin -----the brightness data of the control board ,presented as "brightness Block of tiles" in the File Style menu.

TIPS: In order to make it convenient for the operator, a few definitions are given below for operation of the screws.

Unfasten: It means loosening the screw halfway. Do not unfasten completely or remove the screw.

Unscrew: It means completely unfastening the screw. But because the screws are of an un-detachable type, there is no need to worry about the screw dropping to the ground.

Remove: It means removing the screw completely. Care should be taken of not to let the screw drop to the ground or get lost.

7.2 Replacing a tile of a Broadcast display

Necessary tools

- 6mm cross head screw driver
- 3mm cross head screw driver

Process to remove a tile：

1. Remove the screws on the cable cover. Then re move the cable cover. Cable connectors can be seen.
2. Unfasten the 2 screws on the connector with a 3mm cross head screw driver. Pull up the connector.
3. Remove the 4 screws on the tile by using a 6mm cross head screw driver. Hold the handle on the tile and push the tile out. Then rotate the tile by 45° and take the tile in through the fixation frame.
4. At certain locations, the tiles cannot be retrieved through the fixation frame to the rear side. In such as case, a long rope is recommended for lowering the tile to the ground.
5. If the tile that is to be removed is behind the power box, the power box must be removed first.

The process of installing a tile：

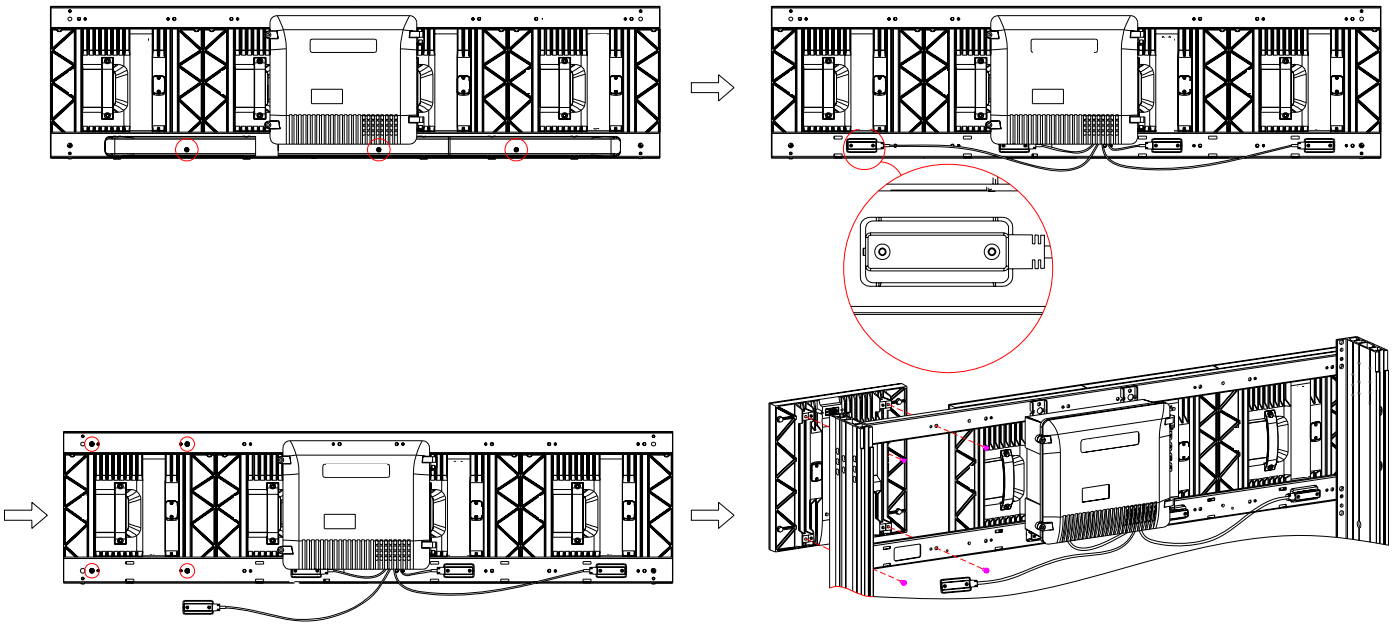

1. Slightly move the tile out through the fixation frame window to the proper location in the front side of the display. Then fasten the 4 screws to fix the tile to the fixation frame.
2. Plug in the connector and make sure that it is firmly connected. Then fasten the 2 screws to fix the connector.
3. Put on the cable cover and fasten the fixing screws.

7.3 Replacing a tile of a front serviced Broadcast display

Necessary tools

- 4mm quincunx head screw driver
- 3mm cross head screw driver

Process to remove a tile：

1. Unfasten the 4 screws fixing the tile from the front side by using a quincunx head screw driver. Pull the tile out by holding two of the screws.
2. Unfasten the 2 screws fixing the connector by using a 3mm cross head screw driver. Then remove

the tile.

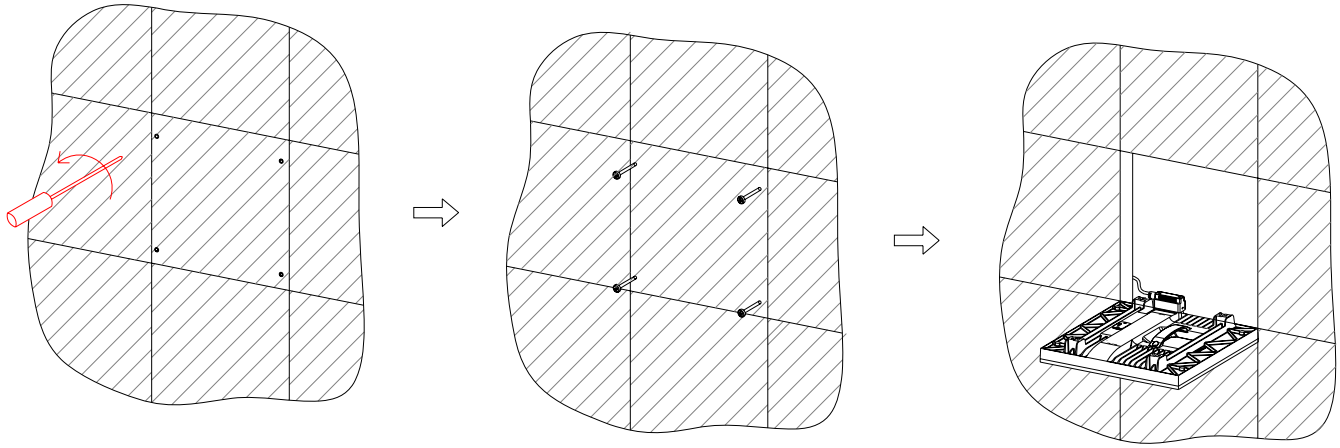

Process to install a tile：

1. Stand in front of the display and hold the tile as near as possible to the installation window. Plug the cable connector carefully into the socket on the tile. Check if the connection is firm and secure. Use a 3mm cross head screw driver to fasten the 2 screws on the connector.
2. Push the tile into the installation window care fully, and use a quincunx head screw driver to fasten the 4 fixing screws on the tile.

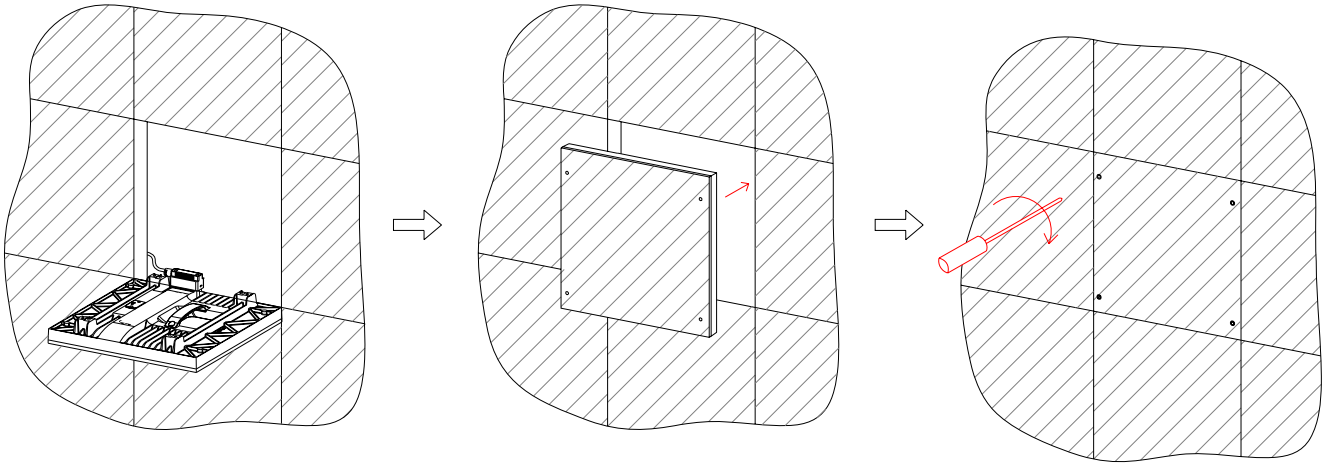

7.4 Replacing a power supply of the display unit

Necessary tools

- 6mm hexagonal key
- 6mm cross head screw driver

CAUTION：The replacement work must be done AFTER all power supplies to the LED display have been completely disconnected.

Process to remove a power supply：

1. Use a 6mm hexagonal key to unfasten the screws on the power box. Then use a 6mm cross head screw driver to remove the 4 fixing screws on the power supply fixing plate inside the box. Remove the power supply with the plate carefully from the box.
2. Unfasten the screws on the connectors of the power supply with a screw driver. Remove the cables to the power supply.
3. Remove the 4 screws in the rear side of the power supply fixing plate, and then remove the power supply.

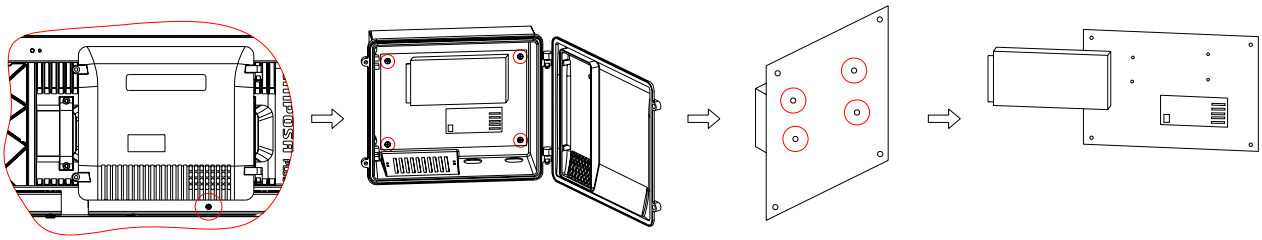

Process to install a power supply：
Install the power supply in a reverse order of removing it, with special attention to be paid to the proper connection of the cables to the power supply.

7.5 Replacing a display unit control board

Necessary tools

- 6mm hexagonal key
- 6mm cross head screw driver

CAUITION：The replacement work must be done AFTER all power supplies to the LED display have been completely disconnected.

Process to remove a display unit control board：

1. Unfasten the screws on the power box door with a 6mm hexagonal key, and then open the door.
2. Disconnect the wires from the control board.
3. Remove the 4 screws fixing the control boardb y using a 6mm cross head screw driver, and then take out the control board.

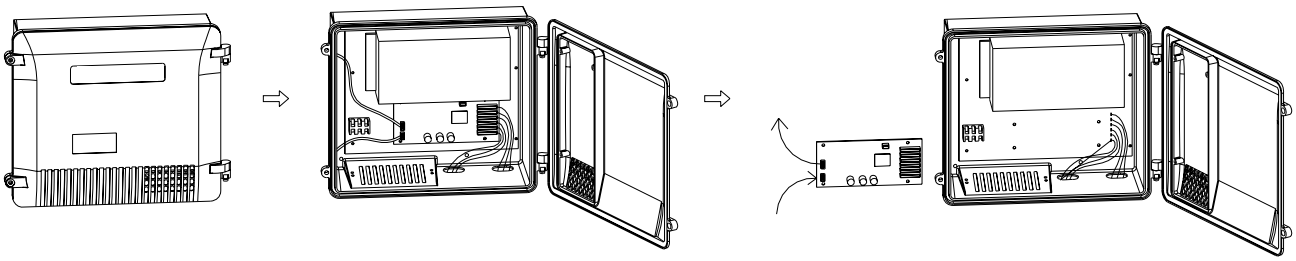

The process to remove the display unit control board：
Remove the board in the reverse process order to the installation process. Special attention should be paid to the location and method of wire connection. Screws on the power box door must be firmly and securely fastened.

7.6 Replacing an LDU control board

Necessary tools

- 6mm hexagonal key.
- 6mm cross head screw driver

CAUTION：The replacement work must be done AFTER all power supplies to the LED display have been completely disconnected.

Process to remove an LDU control board：

1. Use a 6mm hexagonal key to open the open the door on the LDU box.
2. Disconnect the wires to the QS 5800 control board. Check if the si gnal output wires are marked with numbers. If no mark is seen, please label the output signal wires with numbers.
3. Remove the 4 screws on the control board with a 6mm cross head screw driver, and then take out

the control board.

Process to install an LDU control board：
Install the LDU board in the reverse process order of removing it. Special attention should be paid to the location and method of connection of the signal output wires.

7.7 Cleaning tile masks

And outdoor display will be exposed to various kinds of weather conditions, and can easily be smeared with dust and rain water. After a period of us e, the surface of the sign can contract dust and mud, thus reducing the overall bri ghtness and uniformity of the LED display. It is therefore necessary to clean the surface of the LED display.

Necessary tools

- Soft brush with long hair
- Garden hose with a spray nozzle
- Neutral detergent, such as window glass cleanser.
- Compressed air.

Process to clean tile masks

1. Stand in the front of the LED di splay. Use a soft brush to clean the display tiles while spraying water with a water hose.
2. If the tile masks are very dirty, use diluted detergent to help clean the dirt.
3. Use clean water to thoroughly clean the front mask and make sure no detergent is left on the display surface.
4. Wherever available, compressed air should be used to dry up the display surface.

CAUTION：1. Use soft brushes only. Do not use hard a brush, or it will make damage the display surface.
2. Don't use corrosive or strong detergent, or it will cause irreversible damage to the LED masks.
3. Please brush and clean the masks with sp ecial care. Careless brushing or cleaning can cause damage to the display surface.
4. At the end of the cleaning, no detergent should be left on the display surface.

8. Trouble shooting

This chapter introduces some possible trouble symptoms and their remedial treatment to the Broadcast display.

TIPS：If a problem is seen on an LED display and its cause is hard to diagnose, please write down a description of the symptom as detailed as possible, take some pictures and report to the Manufacturer for help.

CAUTION：Before any operation on the PCB or any wire connection is carried out, all power supplies to the LED display MUST be completely disconnected. When doing wire connection, please make sure all wires have been connected properly and securely.

Symptom	Cause Analysis	Remedy
One tile is not displaying or is not displaying properly.	Cables connected to the tile get loose. The signal cable inside the power box of the tile hasn执 been properly connected. Something is wrong with the tile itself.	Connect the cables properly. Change the connectors on the tile and those inside the power box, if necessary. Replace the tile.
A small segment of the tile is not displaying the right color, or the segment is uncontrollable.	Something is wrong with the tile itself.	Replace the tile.
One unit cannot display properly.	Firmware or data on the Unit controller get lost. Tile controller is broken.	Update the CPU program or data on the Unit controller. Replace the Unit controller.
A unit keeps displaying the address number.	Signal cables between Units are not connected well. Firmware on the Unit controller is impaired. Unit controller is broken.	Connect the signal cables between Units properly and securely. Update the CPU program or data on the Unit. Replace the Unit controller.
One unit shows a different color or brightness from other units.	The gamma data on the Unit controller have been set differently from those on other Unit controllers. The brightness data on the Unit controller are different from those on other Unit controllers.	Check the gamma data of the Unit in Broadcast Tools and set them same as those on other controllers. Update the brightness data on the Unit controller or set them to be same as those on other controllers.
A whole patch above a certain unit in a master block goes completely dark.	Either the power supply or the cable connection of the failed Unit at the lowest position needs to be fixed. The signal cable connecting to the failed Unit at the lowest position hasn't been properly connected. The control board of the failed Unit at the lowest position may be impaired.	Check the power supply and the power cable of the Unit. Replace them if necessary. Check the cable connection on the Unit controller. Connect them properly. Replace the Unit controller.
One block cannot light on.	There is no power into this Block. There is no signal into this Block.	Check the power cable and power connector of the Block. Check the connectors at both ends of the signal cables of the

		Block.
One master block keeps showing random contents.	The signal cables on this Block are not connected well.	Check the connectors at both ends of the signal cables of the Block.
The whole display keeps displaying random contents.	There is no power in at all. The power supply or the control board in the LDU failed to work properly. There is no display content available.	Check if there is indeed power input. Check the power supply and the control board in the LDU. Replace them if necessary. Send display contents to the display.

9. Specifications

The chapter lists main parameters of a Broadcast display and those of its components.

Overview
- Broadcast VFO series display specifications
- Dimensions of a Broadcast display
- Weights of Broadcast parts

9.1 Broadcast plus VFO series display specifications

	VFO13.3	VFO16	VFO20	VFO26.7
Pixel pitch	13.3mm	16mm	20mm	26.7mm
LED configuration	1R1G1B			
Tile physical resolutions	24X24	20X20	16X16	12X12
Unit physical resolutions	96X24	80X20	64X16	48X12
Colors	16 bit each color			
Brightness	6500 nit	6500 nit	6500 nit	6000 nit
Viewing angle	Horizontal 120° Vertical 60 °			
Pixel density	5,625/m^2 523/ft^2	3,906/m^2 363/ft^2	2,500/m^2 232/ft^2	1,406/m^2 131/ft^2
Refresh rate	> 600 Hz	> 600 Hz	> 1200 Hz	> 1200 Hz
Power consumption	max. 280W/Unit	max. 280W/Unit	max. 250W/Unit	max. 220W/Unit
Temperature range	-20 ~ 40 °C （ -4 ~ 104 °F ）			
Humidity	40% ~ 95%			
IP rate	IP54 Tile IP66			
Lifetime	Compositive 50000 Hours			
Tile dimensions	320mm X 320mm (12.6ft X 12.6ft)			
Unit dimensions	1280mm X 320mm (50.4ft X 12.6ft)			
Tile weight	2.7kg (6.0lbs)			
Unit weight	18.5kg (40.8lbs)	18kg (39.7lbs)		

9.2 Dimensions of a Broadcast display

Dimensions of a Tile

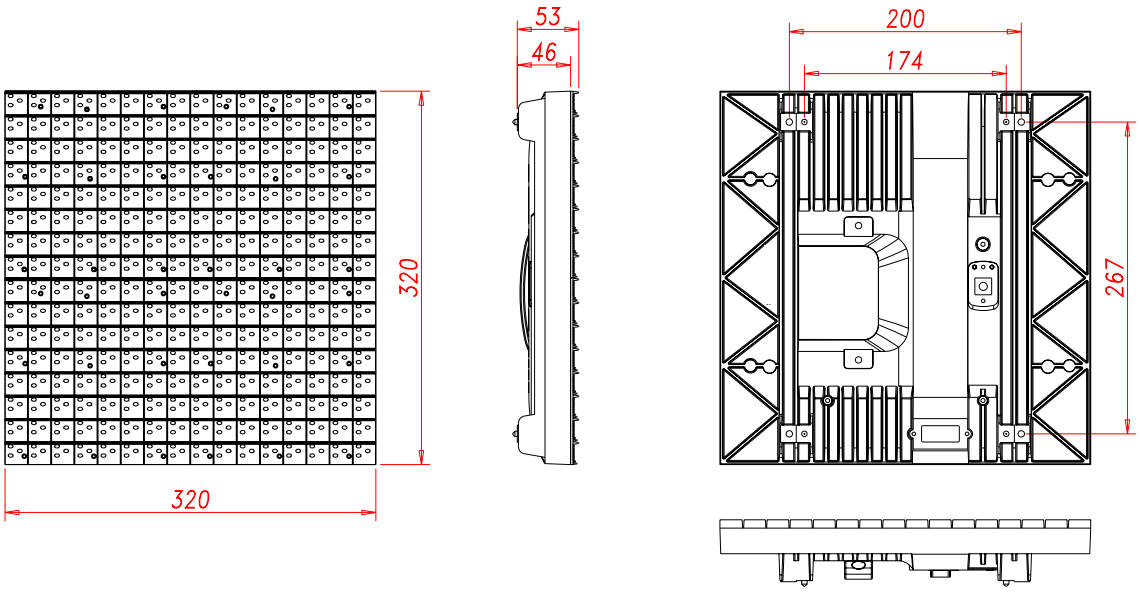

Dimensions of a Unit

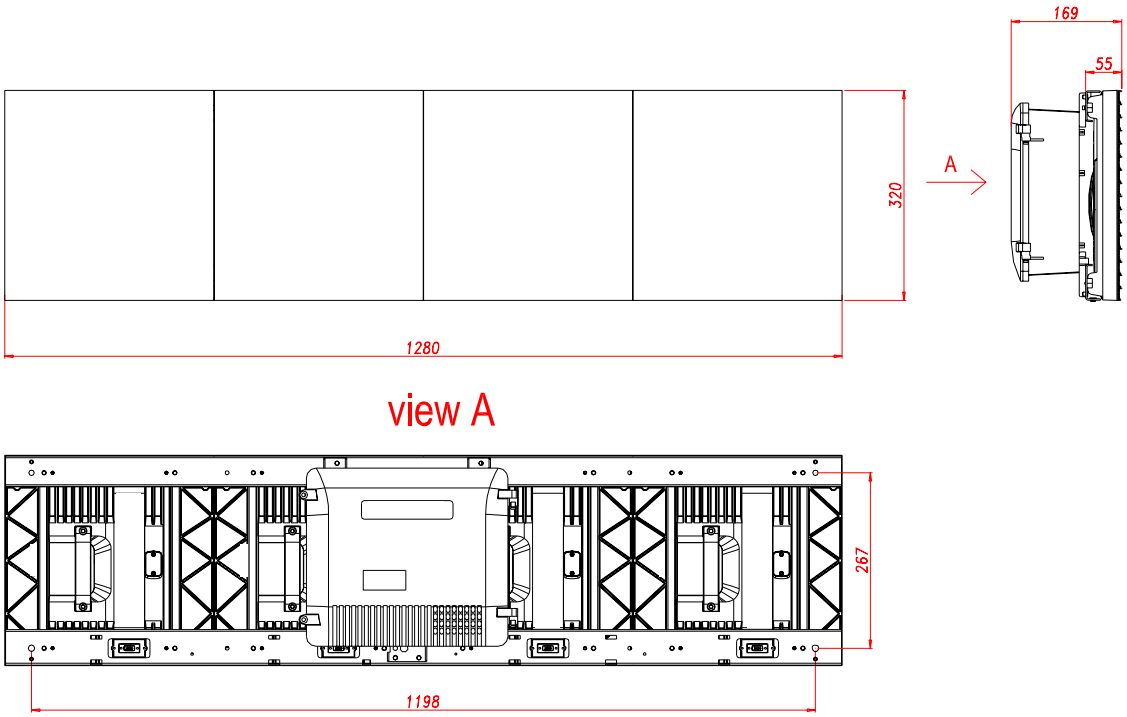

Dimensions of a Block

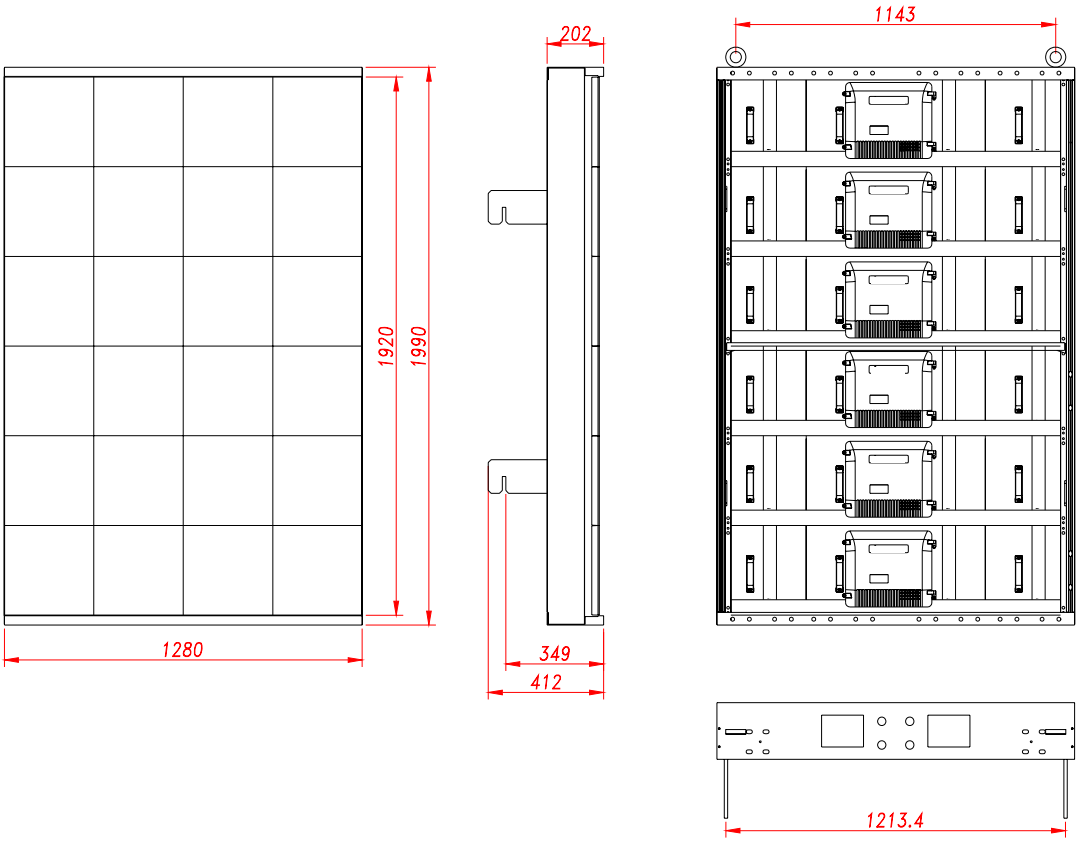

Dimensions of a sample Broadcast display

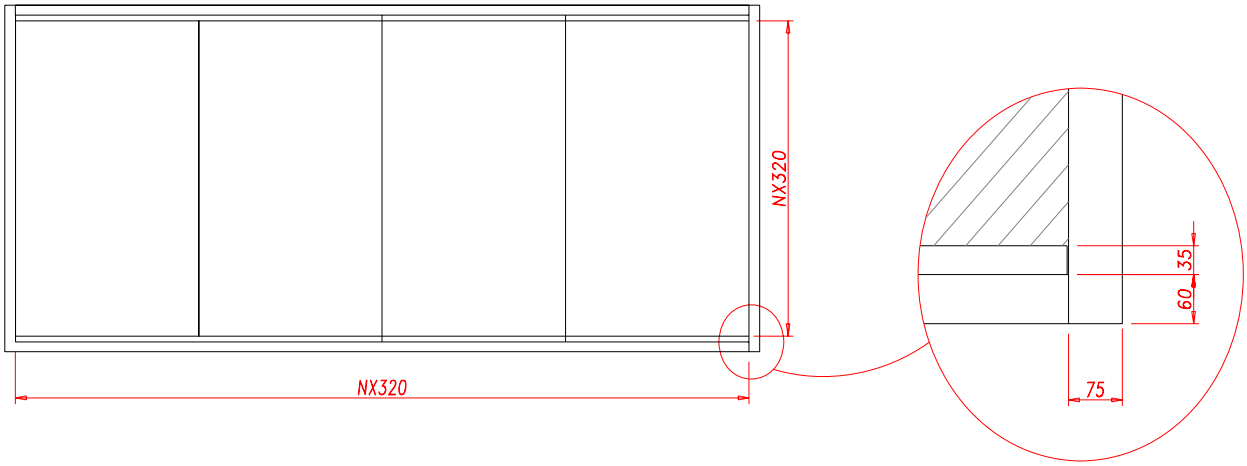

9.3 Weights of Broadcast display parts

Main assembling parts of a Broadcast display

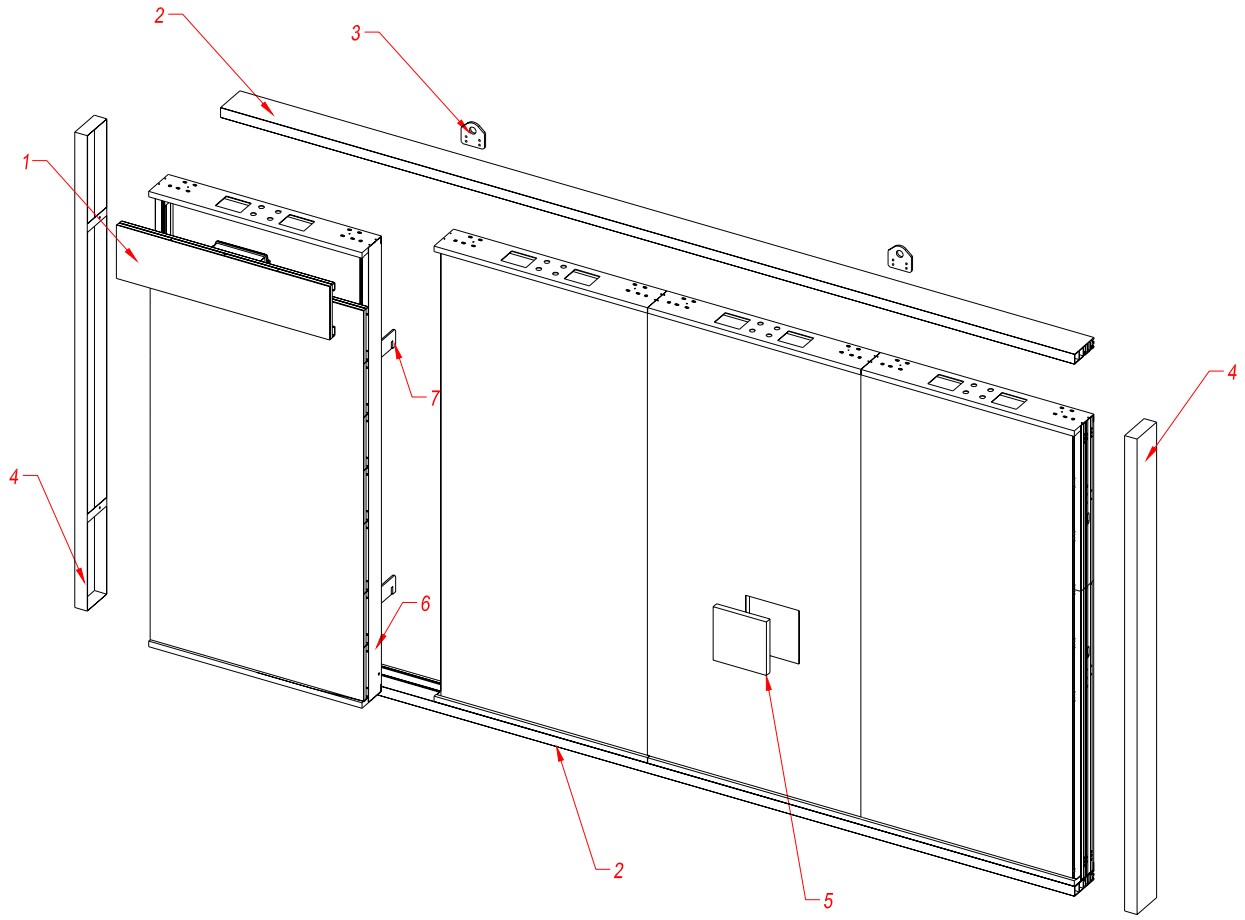

Serial	Parts	Weight
1	Unit	18kg
2	Top (Bottom) beam	10kg/m
3	Hang plate	2.2kg
4	side convers	2.1kg/m
5	Tile	2.7kg
	Aluminum frame	4.4kg/m
7	Hook	1.8kg

10. Part Numbers of Broadcast display parts

Part Number	Parts

Part Number	Parts